Big Tow™ TRAILERS

Replacement Parts, Service Manual and Operating Instructions

This manual covers the following models:

- BE-3.5
- BE-5A
- BE-5
- BE-6
- BE-7
- BE-5BL
- BE-6BL
- B-3.5P
- B-5P
- B-5
- B-6B
- B-7
- B-8
- B-7B
- B-9B
- BE-5P
- BE-6P
- B-8PRS
- B-9PRS
- B-1T
- B-1.75T
- B-2.5T
- B-2.5TSL
- B-5T
- B-6T
- B-7T
- B-5LS
- B-6LS
- B-7LS

DRACO EQUIPMENT
1202 Ross Ave.
Ammon, ID 83406
www.dracoequipment.com
backhoe@cableone.net
Darren Andrews
208-520-6161
fax: 208-561-2172

bigtowtrailers.com

Table of Contents

Read complete manual before using trailer.

4 - 2.2K Hub and Axle
5 - 3.5K Hub, Drum and Axle (non E-Z lube)
6 - 3.5K Hub, Drum and Axles (E-Z lube)
7 - 6K and 7K Hub, Drum and Axles (non E-Z lube)
8 - 6K Hub, Drum and Axles (E-Z lube)
9 - 7.2K Hub, Drum and Axle
10 - 8K Hub, Drum and Axles
11 - 9K, 10K General Duty Hub and Drum
12 - 3.5K Electric Brake, 10" x 2 1/4"
13 - 3.5K Hydraulic Brake, 10" x 2 1/4", Free Backing
14 - 6K,7K Electric Brake, 12" x 2"
15 - 6K Hydraulic Brake, 12" x 2", Free Backing
16 - 7.2K Electric Brake, 12 1/4" x 2 1/2"
17 - 8K Electric Brake, 12 1/4" x 3 3/8"
18 - 9K, 10K, General Duty Electric Brake, 12 1/4" x 3 3/8"
19 - Wheels and Tires
20 - Tire Ratings and Wheel Torque Requirements
21 - GVWR and TIRE SAFETY INFORMATION
22 - " "
23 - " "
24 - " "
25 - " "
26 - " "
27 - " "
28 - " "
29 - " "
30 - " "
31 - " "
32 - Jacks
33 - Jacks
34 - Hitches and Couplers
35 - Hydraulic Actuator (DA10)
36 - Hydraulic Actuator (DA20)
37 - Dexter Electric/ Hydraulic Actuator
38 - Lighting, Batteries, Battery Boxes
39 - Wiring Harness, B-1T, BE-3.5, BE-3.5A, BE-5, BE-5P, BE-5A, BE-5BL, BE-6BL, BE-6P, BE-7
40 - Wiring Harness, B-5LS, B-6LS, B-7LS
41 - Wiring Harness, B-1.75T, B-2.5T, B-3.5P, B-5P, B-5, B-6, B-7B, B-8B, B-9B
42 - Wiring Harness, B-7, B-8, B-9B, B-9, B-8PRS, B-9PRS, B-7B, B-8B, B-9B
43 - Wiring Harness, B-5T, B-6T, B-7T
44 - Wiring Circuits
45 - Deck Latching System, B-1T, B-1.75T, B-2.5T, B-2.5TSL
46 - Deck Latching System
47 - Deck Cushion Cylinder and Pivot Pins, B-5T, B-6T, B-7T
48 - Deck Cushion Cylinder, B-1.75T, B-2.5T
49 - Ramp Rods, Springs, Mounts and Auto-Latch
50 - Ramp Rods, Springs, Mounts and Auto-Latch
51 - Ramps
52 - Ramps
53 - Fenders and Light Boxes
54 - Light Boxes
55 - Miscellaneous Parts
56 - Bucket Stop
57 - Payload Ratings
58 - Towing Tips and Check List
59 - B-1T, B-2.5T, B-5T, B-6T & B-7T Loading Instructions
60 - Decals (Warnings and Cautions)
61 - Decals (Warnings and Cautions)
62 - Decals (Warnings and Cautions)
63 - Decals (Warnings and Cautions), Decal Kits
64 - Reporting Safety Defects, Maintenance and Operating Instructions
65 - Maintenance and Operating Instructions
66 - Maintenance and Operating Instructions
67 - Maintenance and Operating Instructions

2.2K Hub and Axle

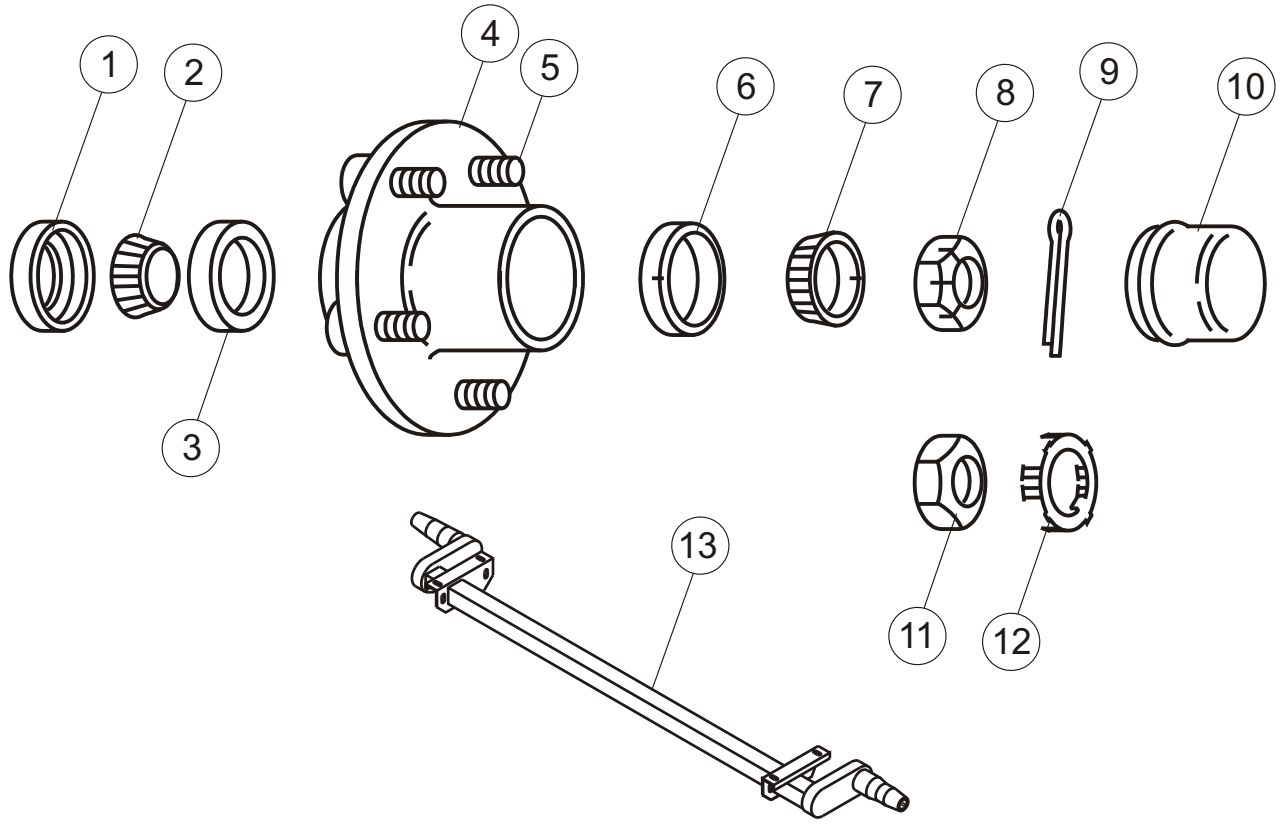

Item	Part #	Description
	25-7258	complete hub assembly, 6 1/2" hub flange
1	25-7271	grease seal, 1.987" o.d., 1.50" i.d.
2	25-3520	inner/outer bearing
3	25-3518	inner/outer race
4	25-7268	hub only, 6 1/2" hub flange
5	25-7273	screw-in stud, 1/2" dia.
6	25-3518	inner/outer race
7	25-3520	inner/outer bearing
8	25-3524	spindle nut
9	25-6016	cotter pin
10	25-3526	grease cap, drive-in (1.986" o.d.)
11	25-1526	jam nut
12	25-1524	nut retainer
13	25-7275	axle (less hubs)
	23-0070	complete axle assembly (not shown)
	37-0701	1/2" cone wheel nut (not shown)

3.5K Hub, Drum and Axle (non E-Z lube)

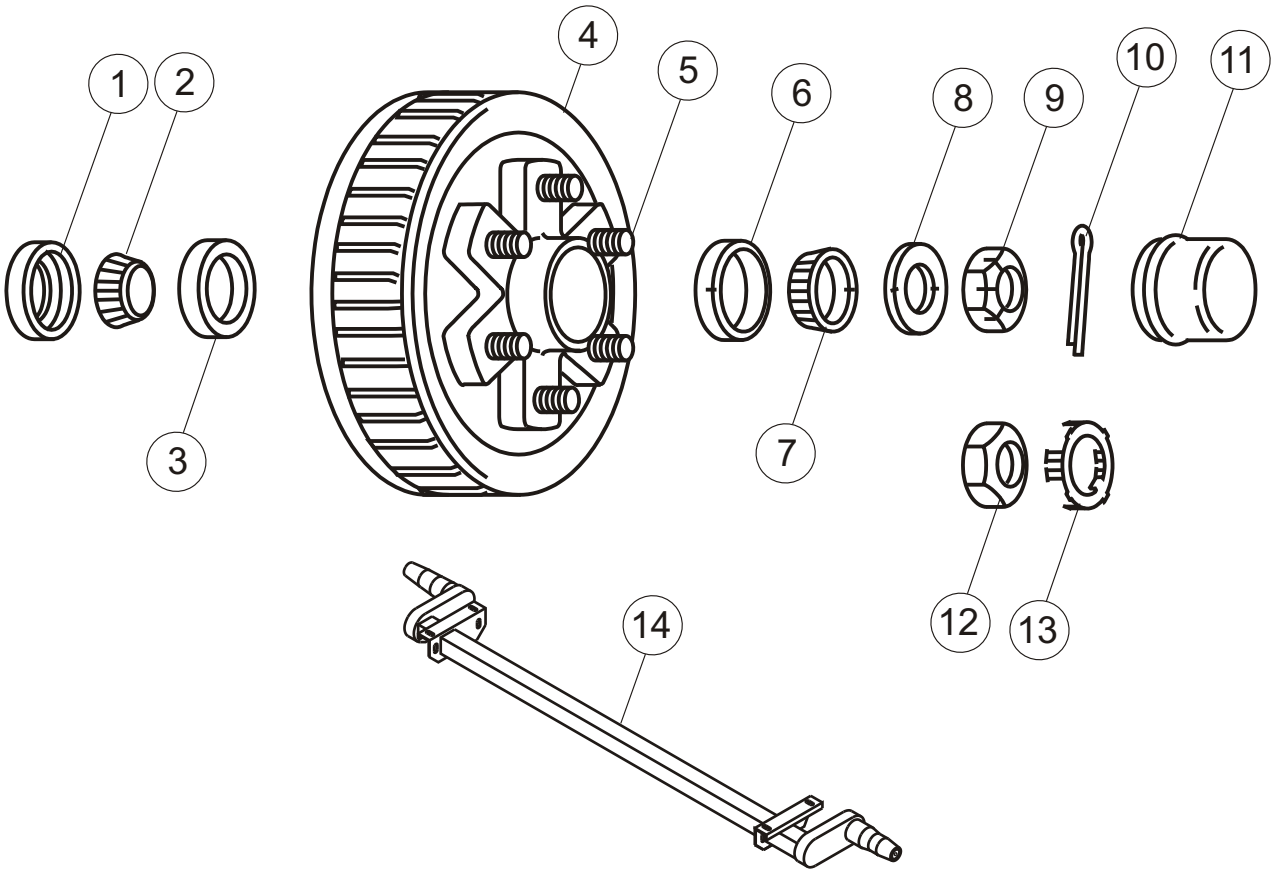

Item	Part #	Description
	25-3500	complete hub/drum assembly
1	25-0002	grease seal
2	25-3510	inner bearing cone
3	25-3512	inner race
4	25-3514	hub and drum only
5	25-6161	1/2" drive-in stud
6	25-3518	outer race
7	25-3520	outer bearing cone
8	25-3522	spindle washer
9	25-3524	spindle nut
10	25-6016	cotter pin
11	25-3526	grease cap
12	25-1526	jam nut
13	25-1524	nut retainer
14	25-0011	axle only, 3,500 lb. Torflex, less hubs/drums
	37-0701	1/2" cone wheel nut (not shown)
		Complete axles...
	23-0001	axle, 3.5k, electric
	23-0011	axle, 3.5k, hydraulic
	23-0011F	axle, 3.5k, hydraulic, free backing

3.5K Hub, Drum and Axles (E-Z lube)

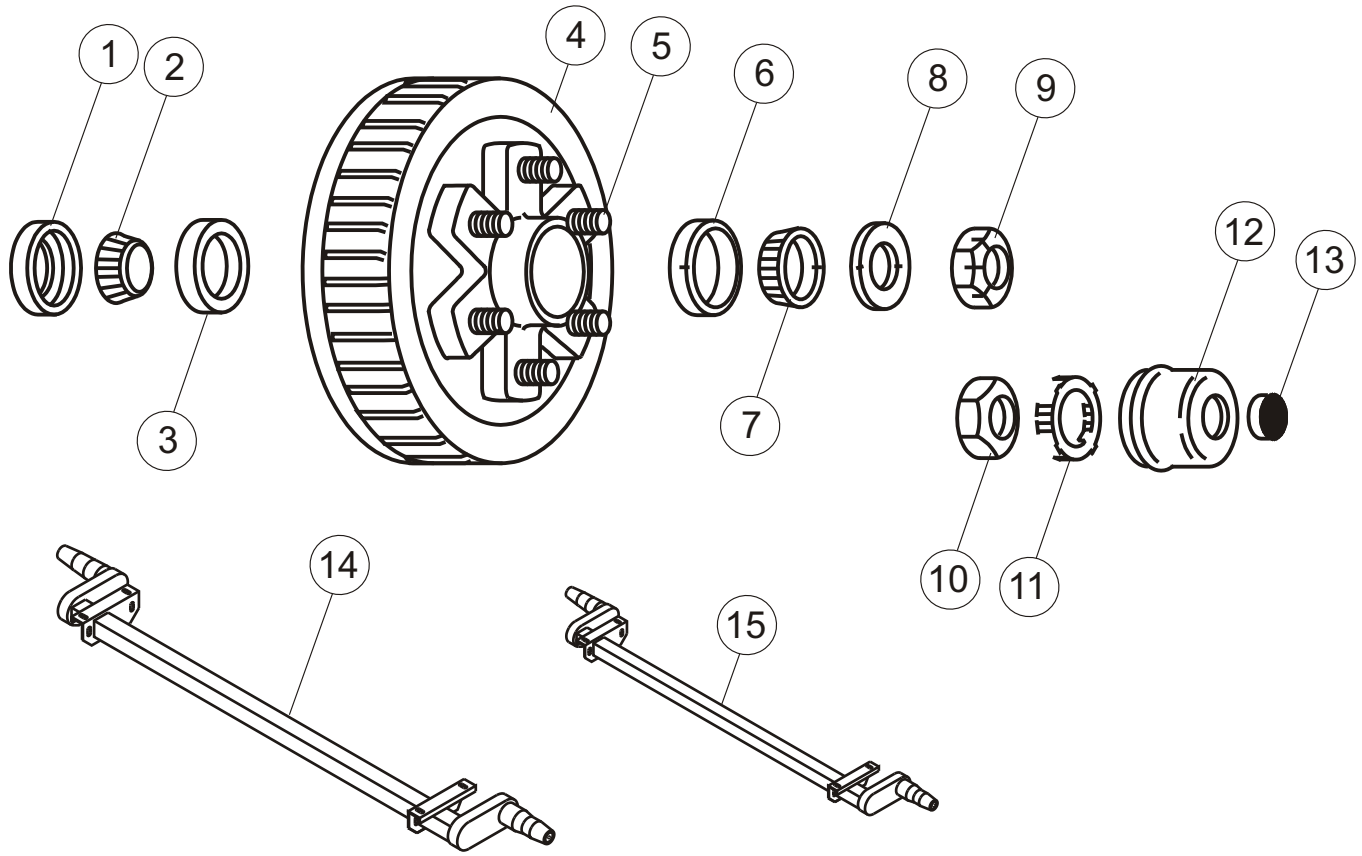

Item	Part #	Description
	25-3505	hub and drum assembly
1	25-0002	grease seal
2	25-3510	inner bearing cone
3	25-3512	inner race
4	25-3514	hub and drum only
5	25-6161	1/2" drive-in stud
6	25-3518	outer race
7	25-3520	outer bearing cone
8	25-3522	spindle washer
	25-3532	tang washer (not shown)
9	25-3524	spindle nut
10	25-1526	jam nut
11	25-1524	nut retainer
12	25-3528	grease cap
13	25-3530	grease cap plug
14	25-0009	3.5k axle only, 10 deg. up, less hubs/drums (B-3.5P)
15	25-3595	3.5k axle only, 10 deg. up, less hubs/drums (B-1.75T)
	37-0701	1/2"cone wheel nut (not shown)
		Complete axles...
	23-0015	3.5k axle, electric (B-3.5P)
	23-0017	3.5k axle, hydraulic (B-3.5P)
	23-0017F	3.5k axle, hydraulic, free backing (B-3.5P)
	23-0012	3.5k axle, electric (B-1.75T)
	23-0014	3.5k axle, hydraulic (B-1.75T)
	23-0014F	3.5k axle, hydraulic, free backing (B-1.75T)

6K and 7K Hub, Drum and Axles (non E-Z lube)

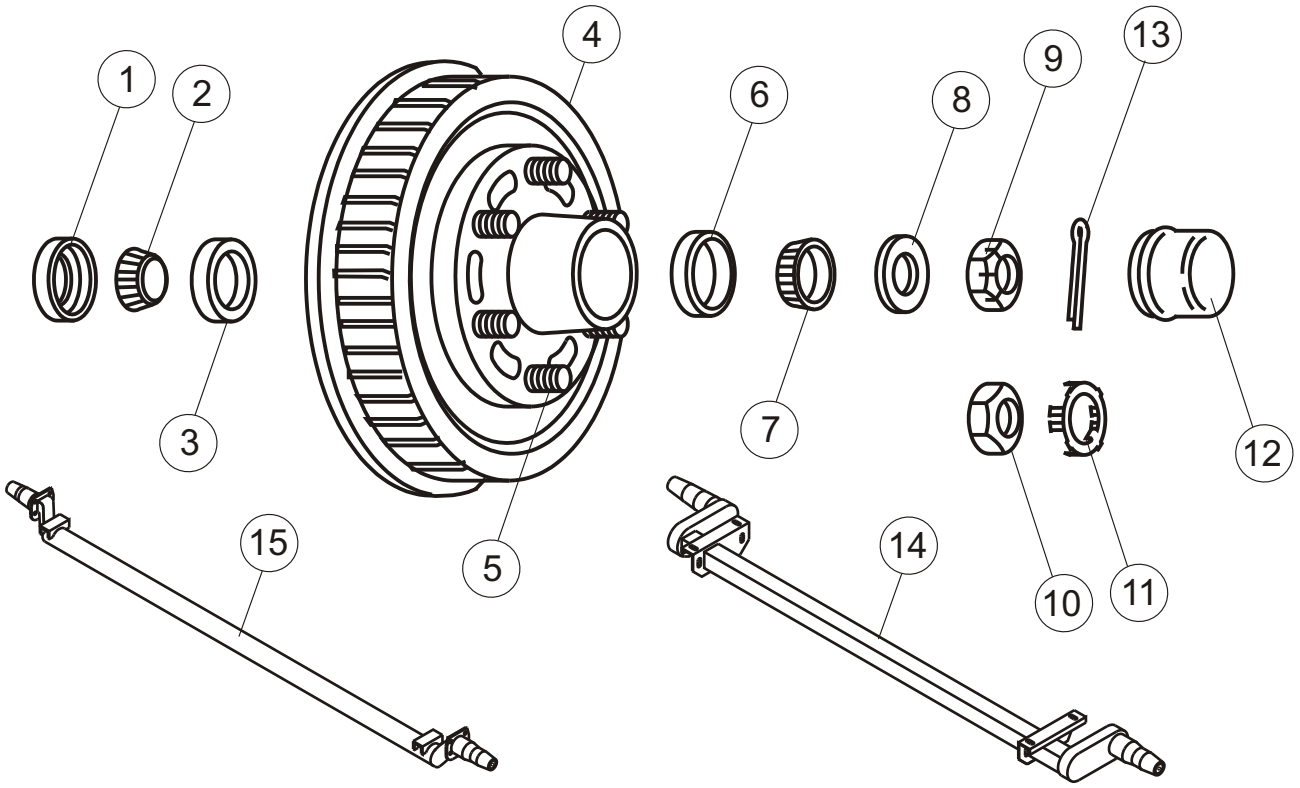

Note: 6K, 6 bolt assembly is shown, please indicate 6K, 7K, 6 bolt or 8 bolt when ordering.
Models BE-7 & B-7LS use 7K axles.

Item	Part #	Description
	25-6000	6K hub and drum assembly, 6 bolt
	25-5005	6K / 7K hub and drum assembly, 8 bolt
1	25-0005	grease seal, 2.25" i.d.
2	25-6010	inner bearing cone
3	25-6012	inner race
4	25-6014	hub and drum only
5	25-6161	1/2" drive-in stud
6	25-6018	outer race, 6 bolt
	25-9010	outer race, 8 bolt
7	25-6020	outer bearing cone, 6 bolt
	25-9015	outer bearing cone, 8 bolt
8	25-3522	spindle washer
9	25-3524	spindle nut
10	25-1526	jam nut
11	25-1524	nut retainer
12	25-6026	grease cap, 6 bolt
	25-5020	grease cap, 8 bolt
13	25-6016	cotter pin
14	25-0008	axle only, 6k rubber ride, less hubs/drums, BE-5,BE-6, BE-5BL, BE-6BL
	25-0010	axle only, 6k rubber ride, less hubs/drums, B-5LS, B-6LS, 45 deg. down
	25-0031	axle only, 7k rubber ride, less hubs/drums, B-7LS, 45 deg. down
15	25-0018	axle only, 6k spring, less hubs/drums/springs, BE-5P, BE-6P
	37-0701	1/2" cone wheel nut (not shown)
		Complete axles...
	23-0003	axle, 6k rubber ride, electric
	23-0013	axle, 6k rubber ride, hydraulic
	23-0013F	axle, 6k rubber ride, hydraulic, free backing
	23-0083	axle, 7k rubber ride, electric (BE-7)
	23-0005	axle, 6k spring, 4" drop, electric
	23-0008	axle, 6k spring, 4" drop, hydraulic
	23-0008F	axle, 6k spring, 4" drop, hydraulic, free backing
	23-8002	axle, 6k rubber ride, electric, 45 deg. down (B-5LS, B-6LS only)
	23-7421	axle, 7k rubber ride, electric, 45 deg. down (B-7LS only)

6K Hub, Drum and Axles (E-Z lube)

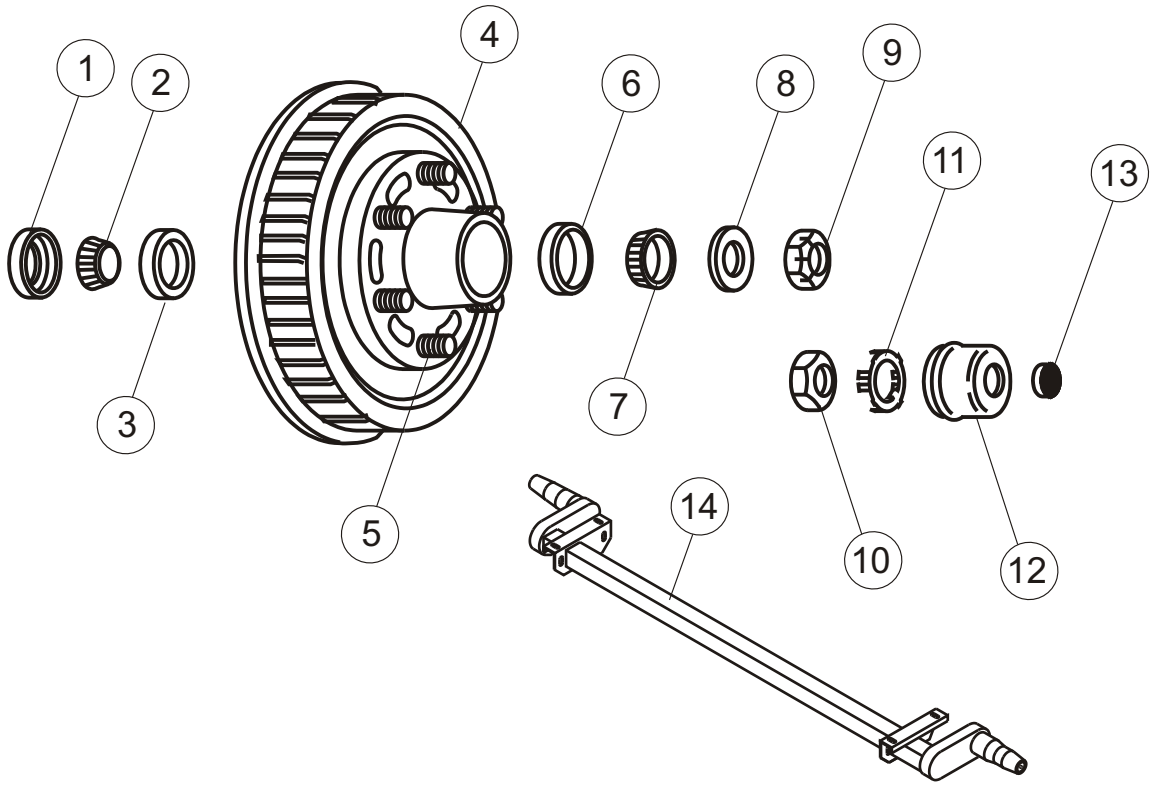

Note: 6 bolt assembly is shown, please indicate 6 or 8 bolt when ordering.

Item	Part #	Description
	25-6005	hub and drum assembly, 6 bolt
	25-5005	hub and drum assembly, 8 bolt
1	25-0005	grease seal, 2.25" i.d.
2	25-6010	inner bearing cone
3	25-6012	inner race
4	25-6014	hub and drum only
5	25-6161	1/2" drive-in stud
6	25-6018	outer race
7	25-6020	outer bearing cone, 6 bolt
	25-9015	outer bearing cone, 8 bolt
8	25-3522	spindle washer
	25-3532	tang washer (not shown)
9	25-3524	spindle nut
10	25-1526	jam nut
11	25-1524	nut retainer
12	25-6028	grease cap, 6 bolt
	25-5010	grease cap, 8 bolt
13	25-3530	grease cap plug
	37-0701	1/2" cone wheel nut (not shown)
14	25-0007	6k axle only, rubber ride, 10 deg. up, less hubs and drums
	25-0014	6k axle only, rubber ride, 22.5 deg. up, less hubs and drums
		Complete axles...
	23-0007	6k axle, rubber ride, electric, 10 deg. up, 6 bolt (8 bolt: 23-2507)
	23-0009	6k axle, rubber ride, hydraulic, 10 deg. up, 6 bolt (8 bolt: 23-2509)
	23-0009F	6k axle, rubber ride, hydraulic, 10 deg. up, free backing, 6 bolt (23-2509F)
	23-0004	6k axle, rubber ride, electric, 22.5 deg. up, 6 bolt (8 bolt: 23-2530)
	23-0010	6k axle, rubber ride, hydraulic, 22.5 deg. up, 6 bolt (8 bolt: 23-2535)
	23-0010F	6k axle, rubber ride, hydraulic, 22.5 deg. up, free backing, 6 bolt

7.2K Hub, Drum and Axle

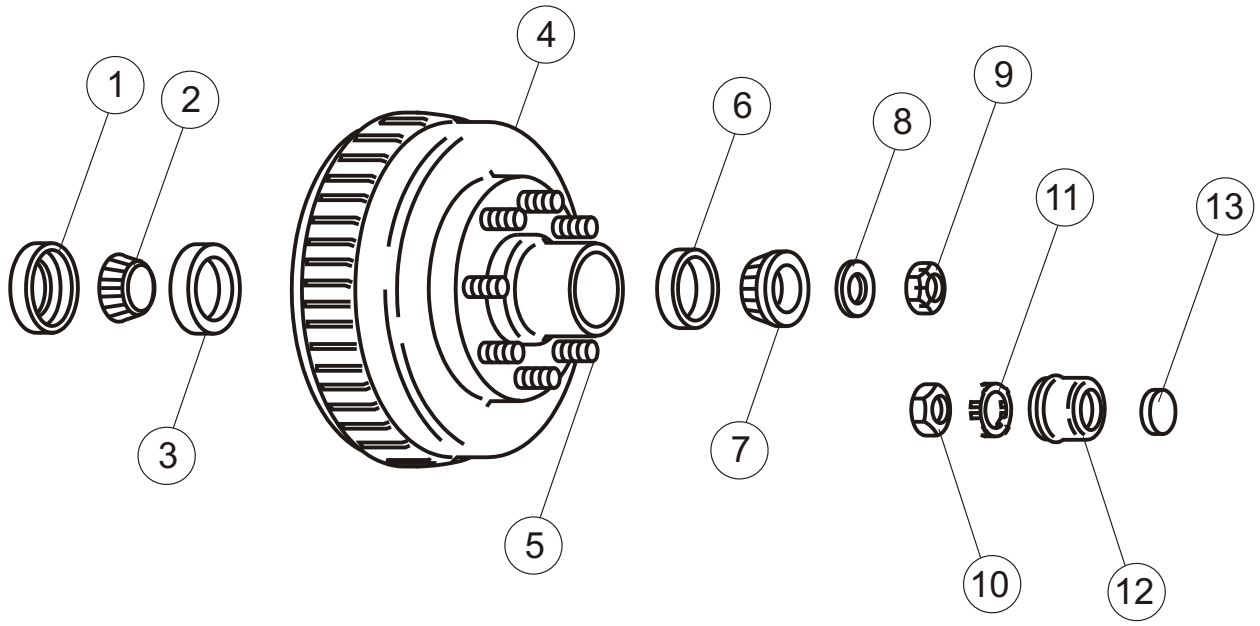

Item	Part #	Description
	25-4012C	hub and drum assembly, 5/8" studs (used with cast iron brake backing plates)
1	25-8010	unitized oil seal, 3.376" o.d., 2.250" i.d.
2	25-6010	inner bearing
3	25-6012	inner race
4	25-4014C	hub and drum only, grease, 5/8" studs (used with cast iron brake backing plates)
5	25-4023	drive-in stud, 5/8"
6	25-8015	outer race
7	25-8020	outer bearing
8	25-6022	spindle washer
	25-3532	tang washer (not shown)
9	25-3524	spindle nut
10	25-1526	jam nut
11	25-1524	nut retainer
12	25-5010	drive-in grease cap, 2.72" o.d.
13	25-3530	grease cap plug
	25-8032	5/8" flange wheel nut (not shown)
	23-0084	complete 7,200 lb. rubber ride axle, 5/8" studs

8K Hub, Drum and Axles

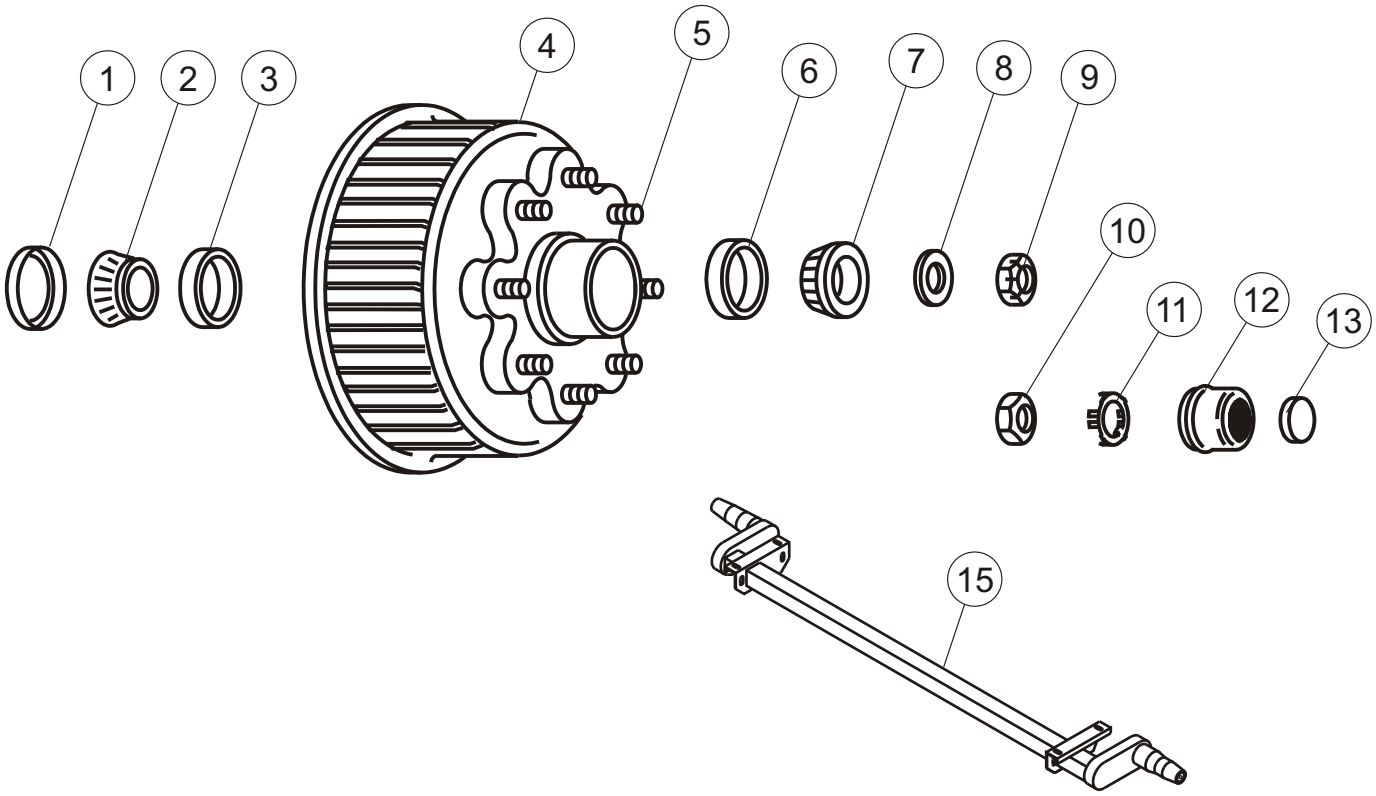

Item	Part #	Description
	25-8002	hub and drum assembly
1	25-8010	unitized oil seal, 3.376" o.d., 2.25" i.d.
2	25-6010	inner bearing
3	25-6012	inner race
4	25-8007	hub and drum only, 5/8" studs
5	25-1015	drive-in stud, 5/8"
6	25-8015	outer race
7	25-8020	outer bearing
8	25-6022	spindle washer
	25-3532	tang washer (not shown)
9	25-3524	spindle nut
10	25-1526	jam nut
11	25-1524	nut retainer
12	25-5010	drive-in grease cap, 2.72" o.d.
13	25-3530	grease cap plug
	25-8032	5/8" flange wheel nut (not shown)
15	25-8001	8k axle only, rubber ride, less hubs and drums (B-8, B-8PRS)
		Complete axles...
	23-0030	complete axle assembly, rubber ride, electric brakes (B-8, B-8PRS)
	23-0036	complete axle assembly, rubber ride, hydraulic brakes (B-8,B-8PRS)

9K, 10K General Duty Hub and Drum

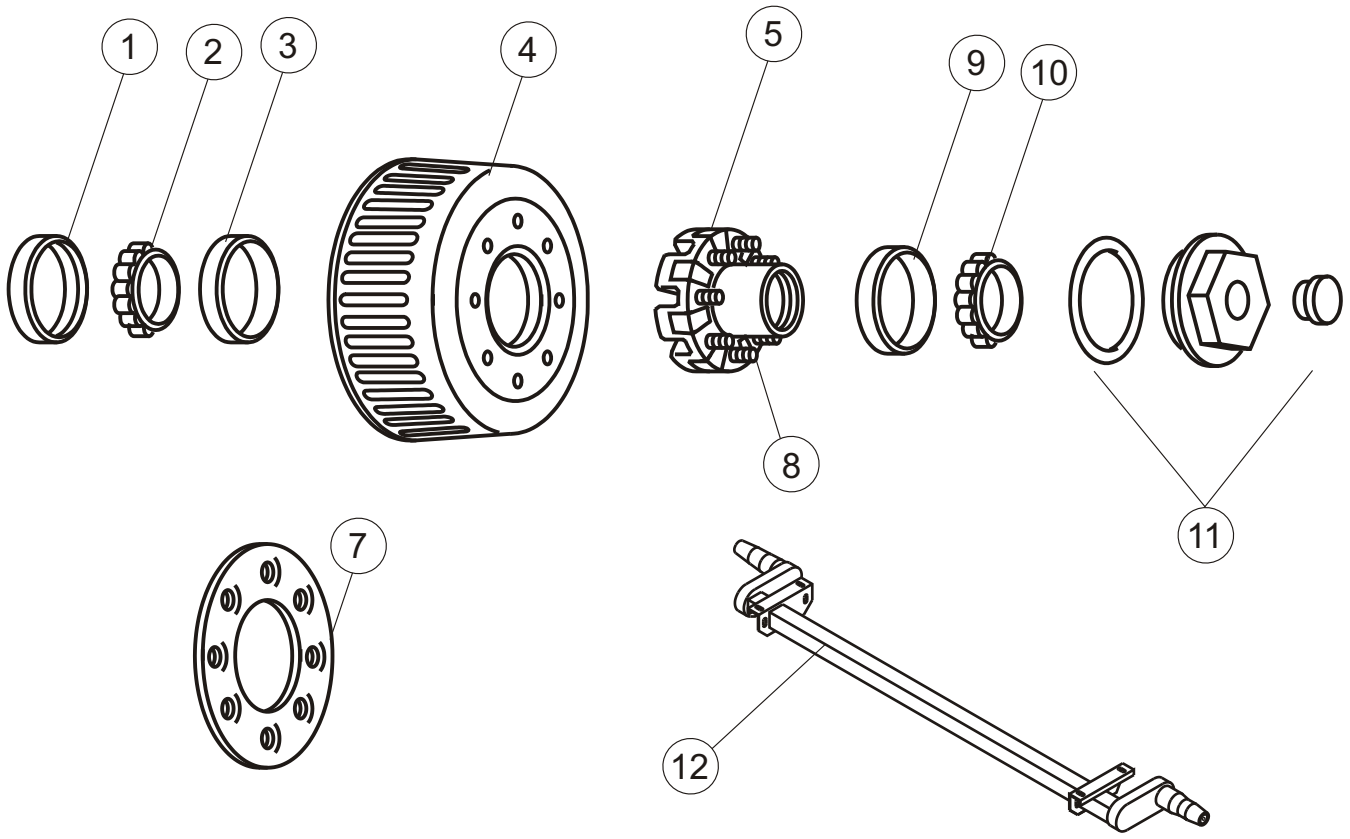

Item	Part #	Description
	25-0900	complete hub assembly (does not include drum)
1	25-0901	unitized oil seal, 3.88" o.d., 2.875" i.d.
2	25-1019	inner bearing
3	25-1017	inner race
4	25-0907	brake drum only
5	25-0909	hub only
6	25-8032	5/8" flange wheel nut (B-9B, B-9PRS)
	25-1011	5/8" cone wheel nut
7	25-1023	wheel retaining ring
8	25-1015	5/8" drive-in stud
9	25-6012	outer race
10	25-6010	outer bearing
11	25-1021	oil cap kit (includes cap, o-ring and plug)
12	25-0950	10,000 lb. Torflex axle only, less hubs and drums (B-9B, B-9PRS)
	23-0035	10,000 lb. Torflex axle, electric brakes (B-9B, B-9PRS)
	23-0037	10,000 lb. Torflex axle, hydraulic brakes (B-9B, B-9PRS)

3.5K Electric Brake, 10" x 2 1/4"

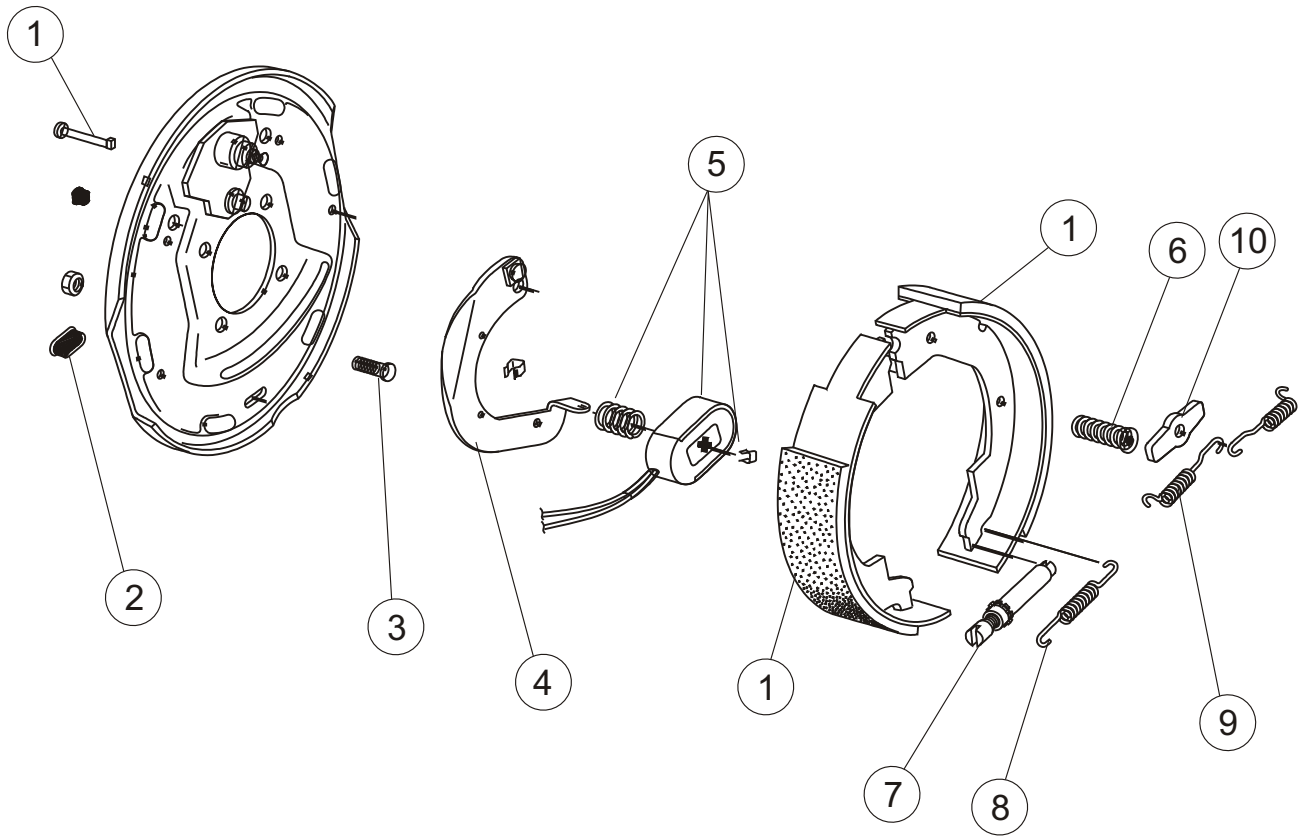

Item	Part #	Description
	31-3501	complete assembly, l.h.
	31-3503	complete assembly, r.h.
1	31-3505	shoe and lining kit
2	31-3507	dust plug, pkg. of 4
3	31-3509	brake mounting bolt
4	31-3511	actuating lever arm, l.h.
	31-3513	actuating lever arm, r.h.
5	31-3515	magnet kit
6	31-3517	hold down springs
7	31-3519	adjuster assembly
8	31-3521	adjuster screw spring
9	31-3523	retractor spring, one pair
10	31-3525	anchor post washer

3.5K Hydraulic Brake, 10" x 2 1/4", Free Backing

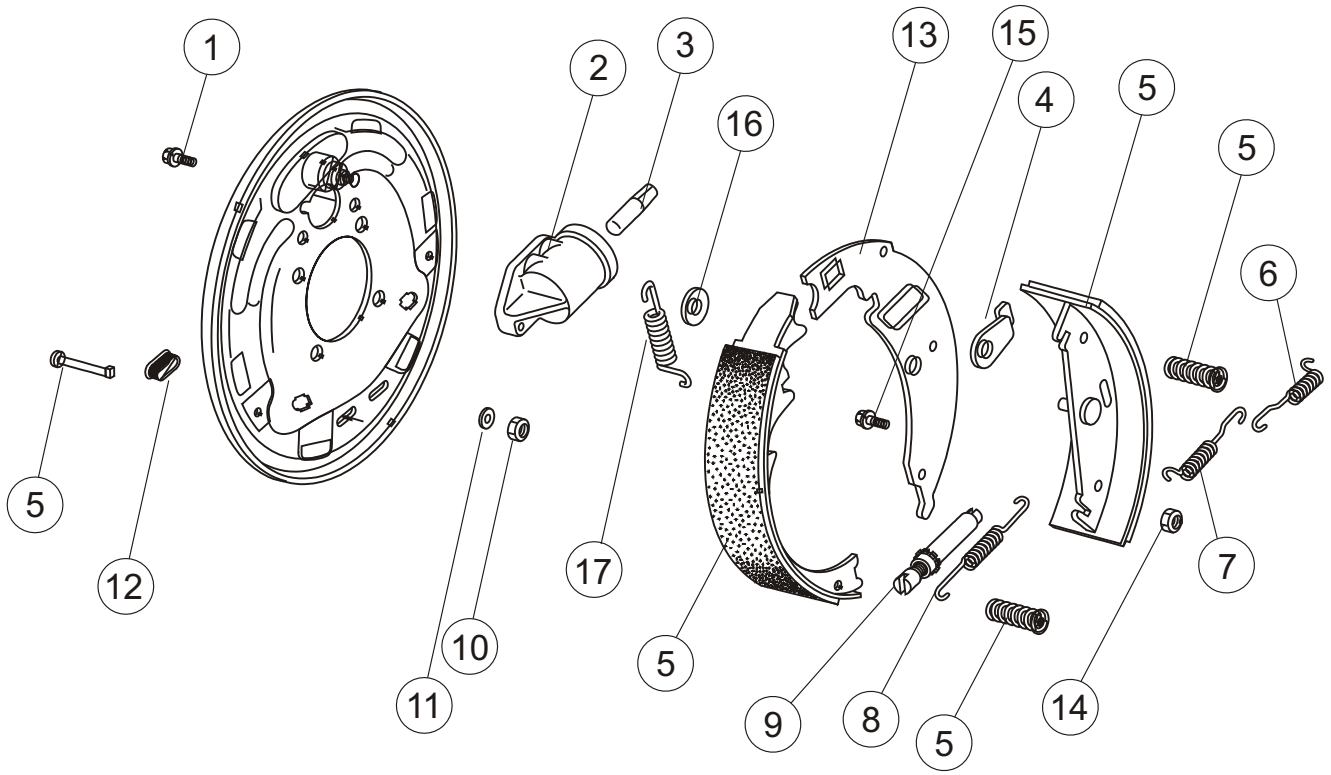

Item	Part #	Description
	31-3705	complete brake assembly, l.h.
	31-3710	complete brake assembly, r.h.
1	31-3610	screw and washer assembly
2	31-3606	brake cylinder, l.h.
	31-3608	brake cylinder, r.h.
3	31-6370	push rod
4	31-6320	travel link
5	31-3715	shoe and lining kit
6	31-6325	shoe lever return spring
7	31-6023	retractor spring
8	31-3720	adjusting screw spring
9	31-3519	adjuster assembly
10	31-3620	brake mounting nut
11	31-6380	lock washer
12	31-3507	dust plug
13	31-3725	shoe lever
14	31-6350	lock nut
15	31-6355	screw
16	31-6360	washer
17	31-6365	primary shoe return spring

6K, 7K Electric Brake, 12" x 2"

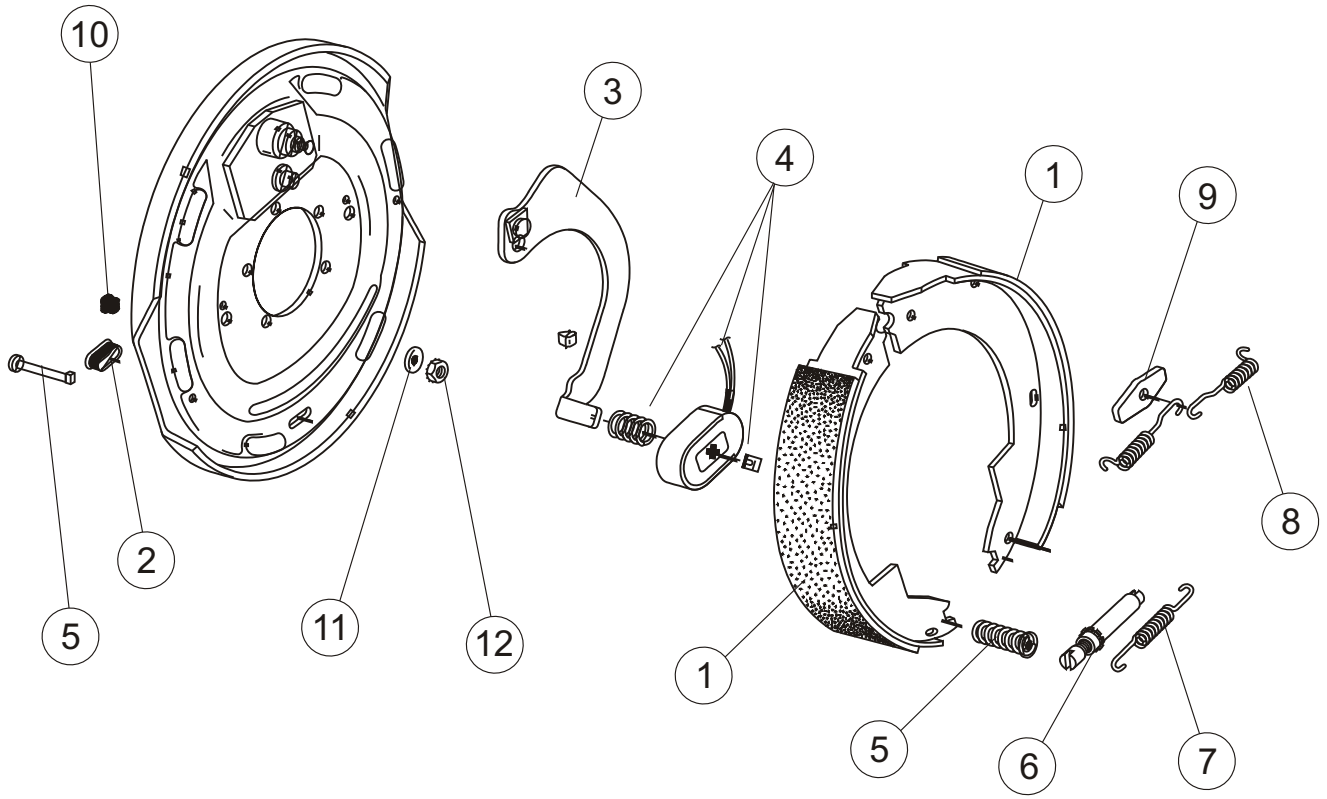

Item	Part #	Description
	31-6001	6K complete assembly, l.h.
	31-6003	6K complete assembly, r.h.
	31-1434	7K complete assembly, l.h.
	31-1436	7K complete assembly, r.h.
1	31-6005	shoe and lining kit
	31-1432	shoe and lining kit, 7K
2	31-3507	dust plug (pkg. of 4)
3	31-6011	actuating lever arm, l.h.
	31-6013	actuating lever arm, r.h.
4	31-6015	magnet kit, 6K
	31-1430	magnet kit, 7K
5	31-3517	hold down springs
6	31-3519	adjuster assembly
7	31-3521	adjuster screw spring
8	31-6023	retractor spring (one pair)
9	31-3525	anchor post washer
10	31-6027	wire grommet
11	31-6029	lock washer
12	31-6031	brake mounting nut

6K Hydraulic Brake, 12" x 2", Free Backing

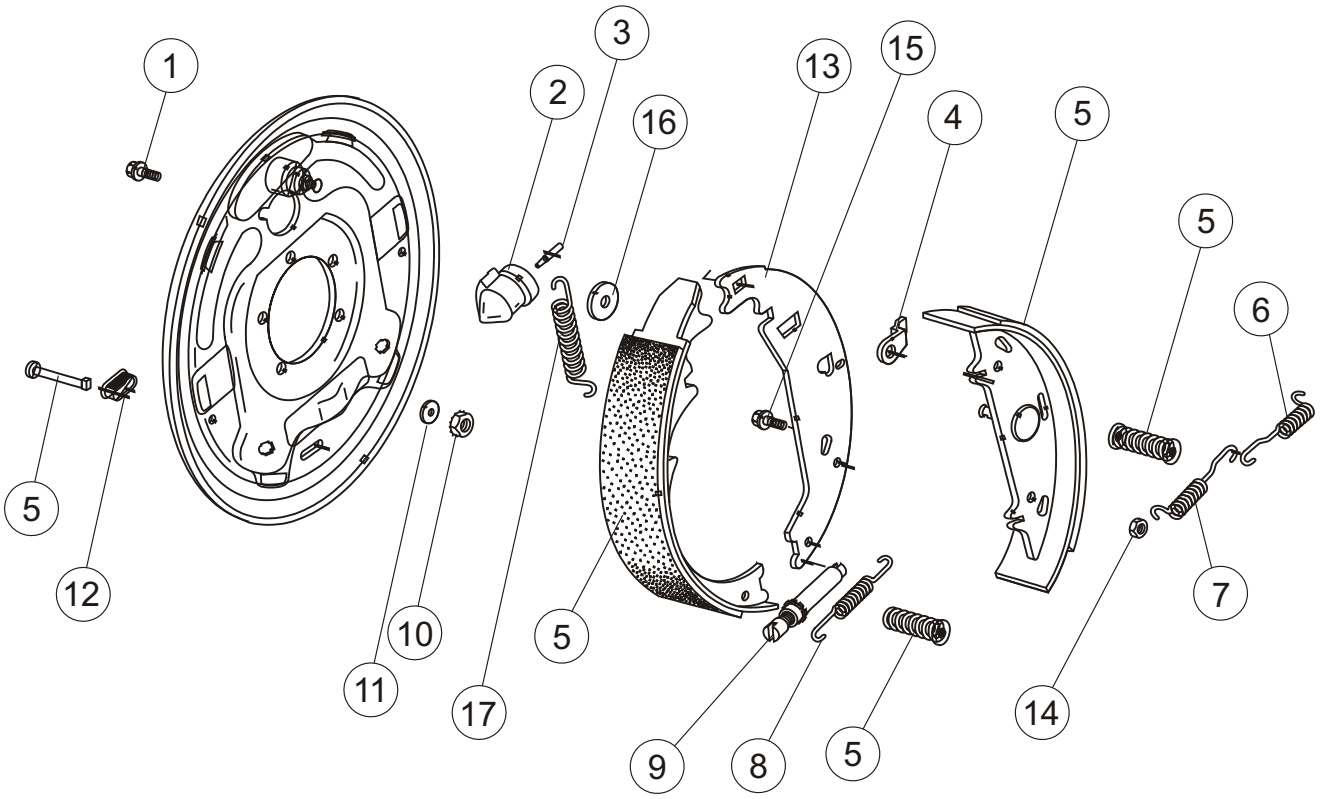

Item	Part #	Description
	31-6305	complete brake assembly, l.h.
	31-6310	complete brake assembly, r.h.
1	31-3610	screw and washer assembly
2	31-3606	brake cylinder, l.h.
	31-3608	brake cylinder, r.h.
3	31-6370	push rod
4	31-6320	travel link
5	31-6330	shoe and lining kit, l.h.
	31-6332	shoe and lining kit, r.h.
6	31-6325	shoe lever return spring
7	31-6106	retractor spring
8	31-6340	adjusting screw spring
9	31-6335	adjuster assembly
10	31-6375	brake mounting nut
11	31-6380	lock washer
12	31-3507	dust plug
13	31-6345	shoe lever
14	31-6350	lock nut
15	31-6355	screw
16	31-6360	washer
17	31-6365	primary shoe return spring

7.2K Electric Brake, 12 1/4" x 2 1/2"

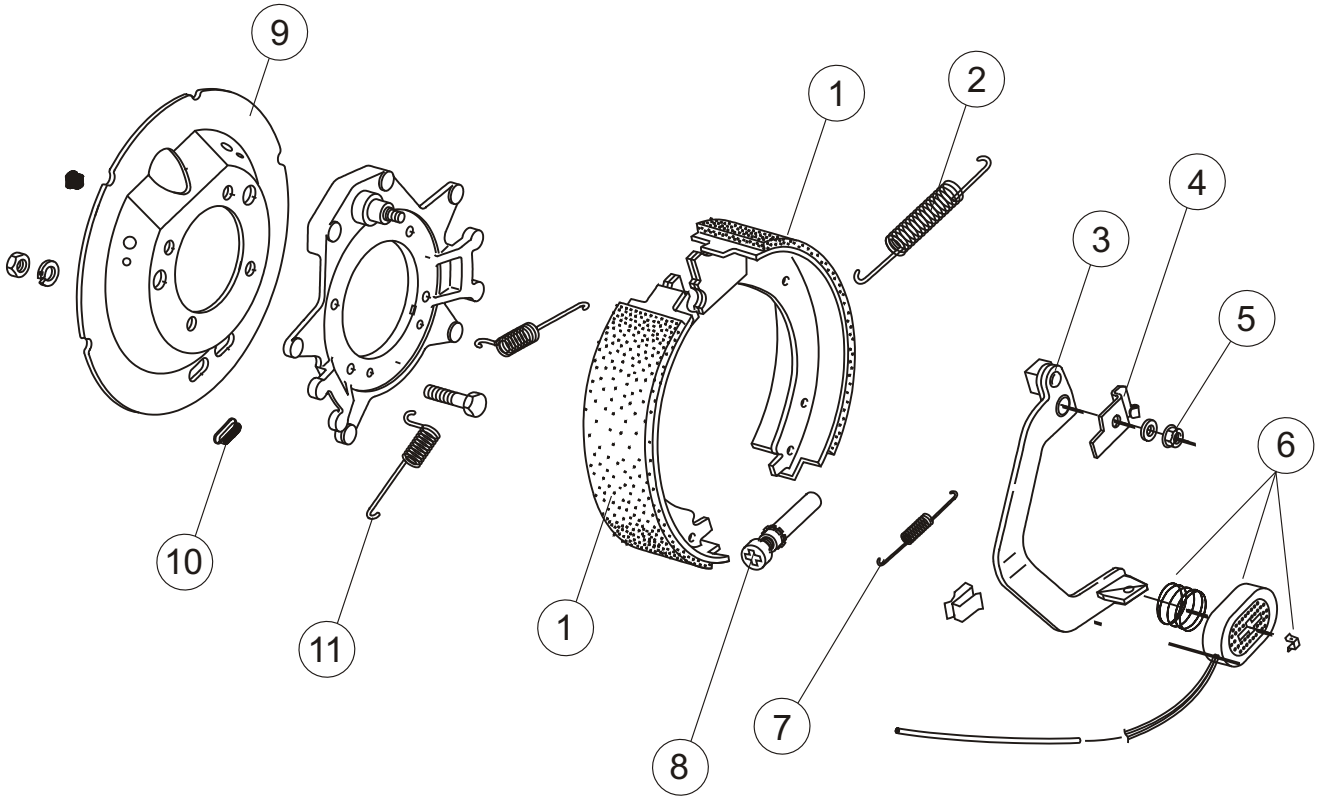

Item	Part #	Description
	31-1504C	l.h. complete brake assembly
	31-1502C	r.h. complete brake assembly
1	31-1515CL	l.h. shoe and lining kit
	31-1515CR	r.h. shoe and lining kit
2	31-1518	shoe return spring (grey)
3	31-1525	l.h. actuating arm assembly
	31-1526	r.h. actuating arm assembly
4	31-1530	l.h. lever arm retainer
	31-1531	r.h. lever arm retainer
5	31-1535	flange nut
6	31-1010	magnet kit
7	31-3521	adjuster spring (red)
8	31-1519	adjuster assembly
9	31-1540	dust shield
10	31-1545	adjuster slot plug
11	31-1322	centering spring

8K Electric Brake, 12 1/4" x 3 3/8"

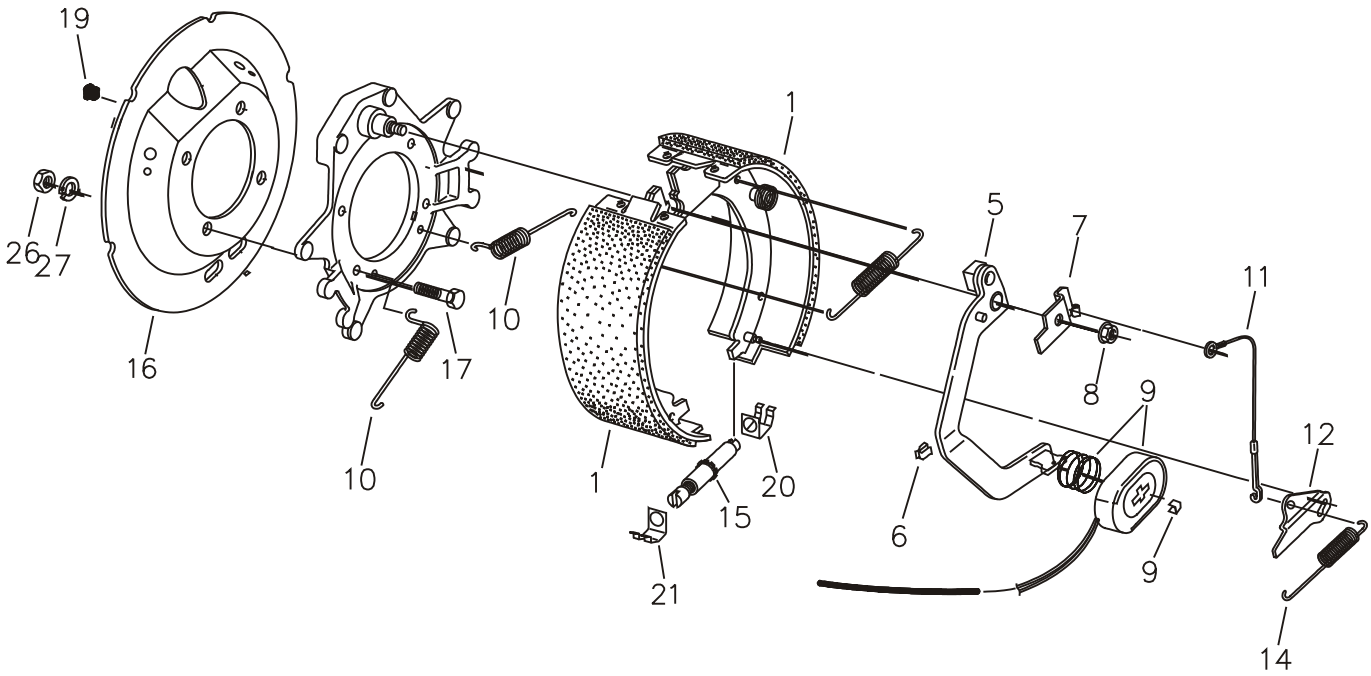

Item	Part #	Description
	310829c	l.h. brake assembly
	310831c	r.h. brake assembly
1	310901c	l.h. shoe and lining kit
	310903c	r.h. shoe and lining kit
5	311007	l.h. actuator arm assembly
	311009	r.h. actuator arm assembly
7	311015	l.h. arm/shoe retainer
	311017	r.h. arm/shoe retainer
8	311535	flange nut
9	311347	magnet kit
10	311322	centering spring
11	311025	adjuster cable
12	311323	l.h. adjuster lever
	311324	r.h. adjuster lever
14	311325	adjuster spring
15	311326	l.h. adjuster assembly
	311327	r.h. adjuster assembly
16	311328	dust shield
17	311329	brake mounting bolt
19	316027	wire grommet
20	311368	adjuster clip (barrel end)
21	311367	adjuster clip (thread end)
26	311330	brake mounting nut
27	311331	brake mounting lockwasher

9K, 10K General Duty Electric Brake, 12 1/4" x 3 3/8"

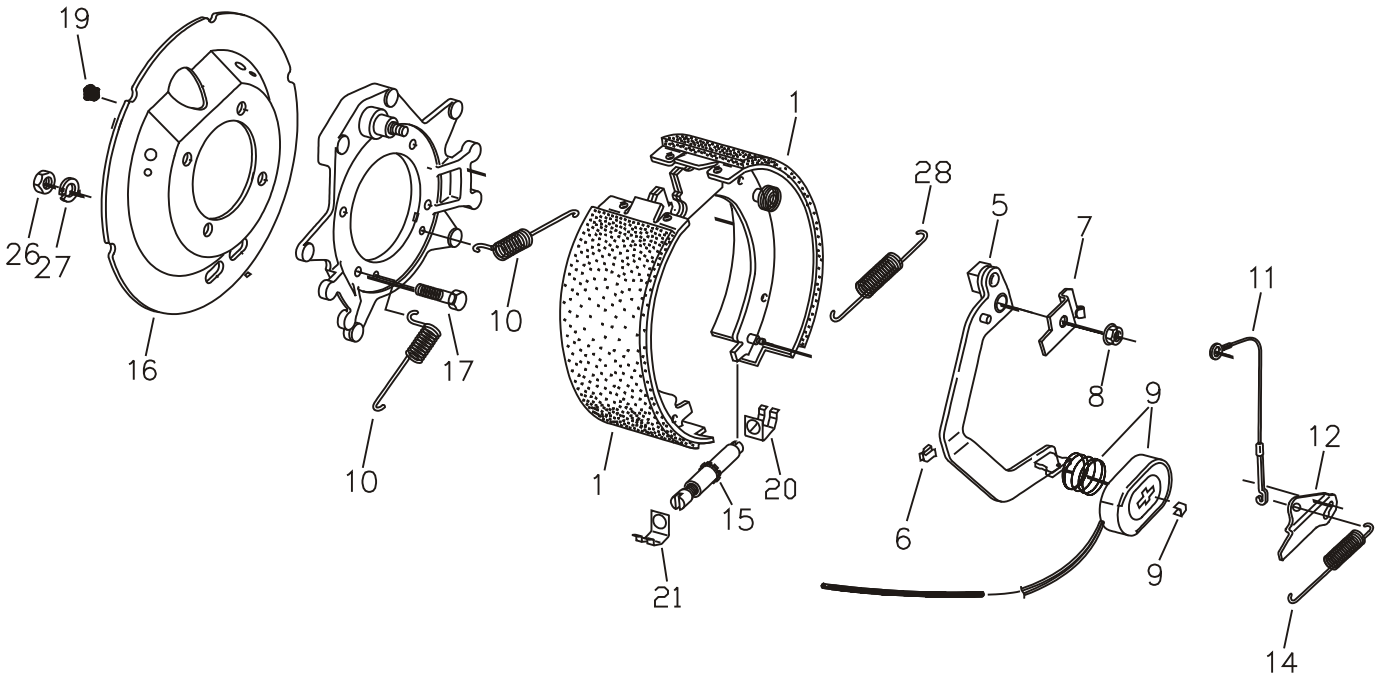

Item	Part #	Description
	310929c	l.h. brake assembly
	310931c	r.h. brake assembly
1	310903c	l.h. shoe and lining kit
	310901c	r.h. shoe and lining kit
5	311007	l.h. actuator arm assembly
	311009	r.h. actuator arm assembly
7	311015	l.h. arm/shoe retainer
	311017	r.h. arm/shoe retainer
8	311342	flange nut
9	311011	magnet kit
10	311322	centering spring
11	311351	adjuster cable
12	311323	l.h. adjuster lever
	311324	r.h. adjuster lever
14	311325	adjuster spring
15	311326	l.h. adjuster assembly
	311327	r.h. adjuster assembly
16	311363	dust shield
17	311352	brake mounting screw
19	316027	wire grommet
20	311367	adjuster clip (thread end)
21	311368	adjuster clip (barrel end)
26	311353	brake mounting nut
27	311354	brake mounting lockwasher
28	311518	return spring

Wheels and Tires

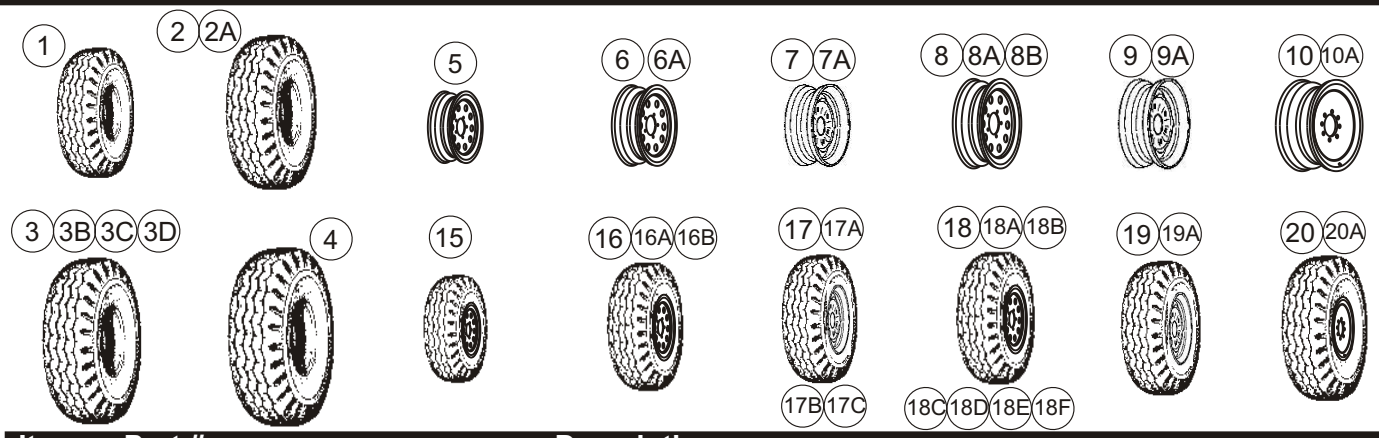

Item	Part #	Description
1	27-0070	tire only, ST175/80R x 13, load range "C"
2	27-0050	tire only, ST205/75R x 15, load range "C"
2A	27-0020	tire only, ST225/75R x 15, load range "D"
3	27-0090	tire only, 235/85R x 16, load range "E"
3B	27-0044	tire only, 245/75R x 16, load range "E"
3C	27-0041	tire only, 235/85 x 16, 12 ply bias (BE-7)
3D	27-0043	tire only, 235/85R x 16, 12 ply, load range “G” (BE-7 upgrade to radial)
4	27-0040	tire only, 215/75R x 17.5, 16 ply, load range "H"
5	27-0700	wheel only, 4.5" x 13", white modular, 5 bolt on 4 1/2" b.c.
6	27-0104	wheel only, 6" x 15", white modular, 6 bolt on 5 1/2" b.c.
6A	27-0107	wheel only, 6" x 15", white modular, 8 bolt on 6 ½" b.c.
	27-0105	wheel only, 6" x 15", spoke, 8 bolt on 6 ½"b.c. (not shown)
7	27-0112	wheel only, 6" x 15", oem, 5 bolt on 4 1/2" b.c.
7A	27-0102	wheel only, 6" x 15", oem, 6 bolt on 5 1/2" b.c.
8	27-0110	wheel only, 6" x 16", white modular, 6 bolt on 5 1/2" b.c.
8A	27-0111	wheel only, 6" x 16", white modular, 8 bolt
8B	27-0130	wheel only, 6" x 16", white modular, 6 bolt on 5 1/2" b.c., 1/2" offset
9	27-0108	wheel only, 6" x 16" oem, 6 bolt
9A	27-0109	wheel only, 6" x 16" oem, 8 bolt
10	27-0602	wheel only, 6.75" x 17.5" single wheel, 8 bolt (silver) different offset than white wheel
10A	27-0606	wheel only, 6.75" x 17.5" single wheel, 8 bolt (white) different offset than silver wheel
15	27-5030	tire/wheel assembly, ST175/80R x 13, load range "C" on 4.5" x 13" white mod., 5 bolt on 4 1/2" b.c.
16	27-5003	tire/wheel assembly, ST205/75R x 15, load range "C" on 6" x 15", white mod., 6 bolt on 5 1/2" b.c.
16A	27-5005	tire/wheel assembly, ST225/75R x 15, load range "D" on 6" x 15", white mod., 6 bolt on 5 1/2" b.c.
16B	27-4120	tire/wheel assembly, ST225/75R x 15, load range "D" on 6" x 15", white mod, 8 bolt on 6 ½"b.c.
	27-4100	tire/wheel assembly, ST225/75R x 15, load range "D" on 6" x 15", spoke, 8 bolt on 6 ½"b.c. (not shown)
17	27-4080	tire/wheel assembly, ST205/75R x 15, load range "C" on 6" x 15", oem, 5 bolt on 4 1/2" b.c.
17A	27-5002	tire/wheel assembly, ST205/75R x 15, load range "C" on 6" x 15", oem, 6 bolt on 5 1/2" b.c.
17B	27-4090	tire/wheel assembly, ST225/75R x 15, load range "D" on 6" x 15" oem, 5 bolt on 4 1/2" b.c.
17C	27-5004	tire/wheel assembly, ST225/75R x 15, load range "D" on 6" x 15" oem, 6 bolt on 5 1/2" b.c.
18	27-6010	tire/wheel assembly, 235/85R x 16, load range "E" on 6" x 16", white mod., 6 bolt on 5 1/2" b.c.
18A	27-6020	tire/wheel assembly, 235/85R x 16, load range "E" on 6" x 16", white mod., 8 bolt
18B	27-5022	tire/wheel assembly, 245/75R x 16, load range "E" on 6" x 16", white mod., 6 bolt on 5 1/2" b.c.
18C	27-5060	tire/wheel assembly, 245/75R x 16, load range "E" on 6" x 16", white mod., 8 bolt
18D	27-5085	tire/wheel assembly, 235/85R x 16, load range "E" on 6" x 16", white mod., 6 bolt on 5 1/2" b.c., 1/2" offset
18E	27-6052	tire/wheel assembly, 235/85 x 16, 12 ply bias on 6" x 16", white mod., 8 bolt (BE-7)
18F	27-5073	tire/wheel assembly, 235/85R x 16, 12 ply radial on 6” x 16”, white mod. 8 bolt (BE-7 upgrade to radial)
19	27-6030	tire/wheel assembly, 235/85R x 16, load range "E" on 6" x 16" oem, 6 bolt
19A	27-6040	tire/wheel assembly, 235/85R x 16, load range "E" on 6" x 16" oem, 8 bolt
20	27-5014	tire/wheel assembly, 215/75R x 17.5, 16 ply, load range "H" on 6.75" x 17.5" single wheel, 8 bolt (silver)
20A	27-5015	tire/wheel assembly, 215/75R x 17.5, 16 ply, load range "H" on 6.75" x 17.5" single wheel, 8 bolt (white)
	37-0413	valve stem
	37-0501	valve stem
	37-0573	valve stem
	37-0574	valve stem

Tire Ratings

ST17580R x 13	load range c, 6 ply rating, 1360 lbs. @ 50psi	single wheel application
ST205/75R x 15	load range c, 6 ply rating, 1820 lbs. @ 50psi	single wheel application
ST225/75R x 15	load range d, 8 ply rating, 2540 lbs. @ 65psi	single wheel application
215/75R x 17.5	load range h, 16 ply rating, 4805 lbs. @ 125psi	single wheel application
215/75R x 17.5	load range h, 16 ply rating, 4540 lbs. @ 125psi	dual wheel application
235/75R x 17.5	load range h, 16 ply rating, 6005 lbs. @ 125psi	single wheel application
235/75R x 17.5	load range h, 16 ply rating, 5675 lbs. @ 125psi	dual wheel application
235/85R x 16	load range g, 12 ply rating, 3750 lbs. @ 110psi	single wheel application
235/85R x 16	load range g, 12 ply rating, 3415 lbs. @ 110psi	dual wheel application
235/85R x 16	load range e, 10 ply rating, 3042 lbs. @ 80psi	single wheel application
235/85R x 16	load range e, 10 ply rating, 2778 lbs. @ 80psi	dual wheel application
235/85 x 16	load range g, 12 ply *bias*, 3415 lbs. @ 90psi	single wheel application
245/75R x 16	load range e, 10 ply rating, 3042 lbs. @ 80psi	single wheel application
245/75R x 16	load range e, 10 ply rating, 2778 lbs. @ 80psi	dual wheel application

Wheel Torque Requirements (ft. lbs.)

1st Stage	2nd Stage	3rd Stage

Wheel Size	1st Stage	2nd Stage	3rd Stage
12"	20-25	35-40	50-75
13"	20-25	35-40	50-75
14"	20-25	50-60	90-120
15"	20-25	50-60	90-120
16"	20-25	50-60	90-120
16.5" x 6.75"	20-25	50-60	90-120
16.5" x 9.75"	55-60	120-125	175-225
14.5" Demount.	Tighten sequentially to		85-95
17.5" Hub Pilot Clamp Ring & Cone Nuts	50-60	100-120	190-210
17.5" Hub Pilot 5/8" Flange Nuts	50-60	190-200	275-325

Torque Sequence

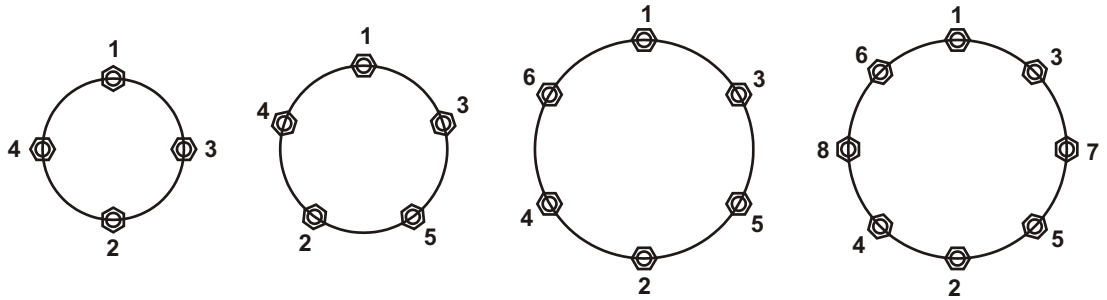

General

A recent law was enacted that requires trailer manufacturers to place a tire and loading information decal placed near the serial tag on a trailer as well as detailed information on loading and tires in the owner's manual on all trailers with a GVWR (Gross Vehicle Weight Rating) of 10,000 lbs. or less. This section of our manual covers the required information.

Tire and Safety Information

This portion of the User's Manual contains tire safety information as required by 49 CFR 575.6.

Section 1.1 contains "Steps for Determining Correct Load Limit - Trailer".
Section 1.2 contains "Steps for Determining Correct Load Limit – Tow Vehicle".
Section 1.3 contains a Glossary of Tire Terminology, including "cold inflation pressure", "maximum inflation pressure", "recommended inflation pressure", and other non-technical terms.
Section 1.4 contains information from the NHTSA brochure entitled "Tire Safety – Everything Rides On It".
This brochure, as well as the preceding subsections, describes the following items;

Tire labeling, including a description and explanation of each marking on the tires, and information about the DOT Tire Identification Number (TIN).

Recommended tire inflation pressure, including a description and explanation of:

A. Cold inflation pressure.

B. Vehicle Placard and location on the vehicle.

C. Adverse safety consequences of under inflation (including tire failure).

D. Measuring and adjusting air pressure for proper inflation.

E. Tire Care, including maintenance and safety practices.

Vehicle load limits, including a description and explanation of the following items:

A. Locating and understanding the load limit information, total load capacity, and cargo capacity.

B. Calculating total and cargo capacities with varying seating configurations including quantitative examples showing / illustrating how the vehicles cargo and luggage capacity decreases as combined number and size of occupants' increases. This item is also discussed in Section 3.

C. Determining compatibility of tire and vehicle load capabilities.

D. Adverse safety consequences of overloading on handling and stopping on tires.

1.1. Steps for Determining Correct Load Limit – Trailer

Determining the load limits of a trailer includes more than understanding the load limits of the tires alone. On all trailers there is a Federal certification/VIN label that is located on the forward half of the left (road) side of the unit. This certification/VIN label will indicate the trailer's Gross Vehicle Weight Rating (GVWR). This is the most weight the fully loaded trailer can weigh. It will also provide the Gross Axle Weight Rating (GAWR). This is the most a particular axle can weigh. If there are multiple axles, the GAWR of each axle will be provided.

If your trailer has a GVWR of 10,000 pounds or less, there is a vehicle placard located in the same location as the certification label described above. This placard provides tire and loading information. In addition, this placard will show a statement regarding maximum cargo capacity. Cargo can be added to the trailer, up to the maximum weight specified on the placard. The combined weight of the cargo is provided as a single number. In any case, remember: the total weight of a fully loaded trailer can not exceed the stated GVWR.

Tire and Safety Information - Continued

1.1. Steps for Determining Correct Load Limit – Trailer (continued)

For trailers with living quarters installed, the weight of water and propane also need to be considered. The weight of fully filled propane containers is considered part of the weight of the trailer before it is loaded with cargo, and is not considered part of the disposable cargo load. Water however, is a disposable cargo weight and is treated as such. If there is a fresh water storage tank of 100 gallons, this tank when filled would weigh about 800 pounds. If more cargo is being transported, water can be off-loaded to keep the total amount of cargo added to the vehicle within the limits of the GVWR so as not to overload the vehicle. Understanding this flexibility will allow you, the owner, to make choices that fit your travel needs.

When loading your cargo, be sure it is distributed evenly to prevent overloading front to back and side to side. Heavy items should be placed low and as close to the axle positions as reasonable. Too many items on one side may overload a tire. The best way to know the actual weight of the vehicle is to weigh it at a public scale. Talk to your dealer to discuss the weighing methods needed to capture the various weights related to the trailer. This would include the weight empty or unloaded, weights per axle, wheel, hitch or king-pin, and total weight.

Excessive loads and/or underinflation cause tire overloading and, as a result, abnormal tire flexing occurs. This situation can generate an excessive amount of heat within the tire. Excessive heat may lead to tire failure. It is the air pressure that enables a tire to support the load, so proper inflation is critical. The proper air pressure may be found on the certification/VIN label and/or on the Tire Placard. This value should never exceed the maximum cold inflation pressure stamped on the tire.

1.1.1. Trailers 10,000 Pounds GVWR or Less

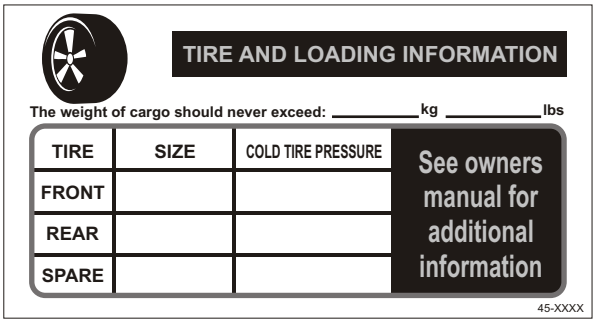

1. Locate the statement, “The weight of cargo should never exceed XXX kg or XXX lbs.,” on your vehicle’s placard. See figure 1-1.

2. This figure equals the available amount of cargo and luggage load capacity.

3. Determine the combined weight of luggage and cargo being loaded on the vehicle. That weight may not safely exceed the available cargo and luggage load capacity.

The trailer’s placard refers to the Tire Information Placard attached adjacent to or near the trailer’s VIN (Certification) label at the left front of the trailer.

1.1.2. Trailers Over 10,000 Pounds GVWR (Note: These trailers are not required to have a tire information placard on the vehicle)

1. Determine the empty weight of your trailer by weighing the trailer using a public scale or other means. This step does not have to be repeated.

2. Locate the GVWR (Gross Vehicle Weight Rating) of the trailer on your trailer’s VIN (Certification) label.

3. Subtract the empty weight of your trailer from the GVWR stated on the VIN label. That weight is the maximum available cargo capacity of the trailer and may not be safely exceeded.

Tire and Safety Information - Continued

1.2. Steps for Determining Correct Load Limit – Tow Vehicle

1. Locate the statement, “The combined weight of occupants and cargo should never exceed XXX lbs.,” on your vehicle’s placard.

2. Determine the combined weight of the driver and passengers who will be riding in your vehicle.

3. Subtract the combined weight of the driver and passengers from XXX kilograms or XXX pounds.

4. The resulting figure equals the available amount of cargo and luggage capacity. For example, if the “XXX” amount equals 1400 lbs. and there will be five 150 lb. passengers in your vehicle, the amount of available cargo and luggage capacity is 650 lbs. (1400-750 (5 x 150) = 650 lbs.).

5. Determine the combined weight of luggage and cargo being loaded on the vehicle. That weight may not safely exceed the available cargo and luggage capacity calculated in Step # 4.

6. If your vehicle will be towing a trailer, load from your trailer will be transferred to your vehicle. Consult the tow vehicle’s manual to determine how this weight transfer reduces the available cargo and luggage capacity of your vehicle.

1.3. Glossary Of Tire Terminology

Accessory weight
The combined weight (in excess of those standard items which may be replaced) of automatic transmission, power steering, power brakes, power windows, power seats, radio and heater, to the extent that these items are available as factory-installed equipment (whether installed or not).

Bead
The part of the tire that is made of steel wires, wrapped or reinforced by ply cords and that is shaped to fit the rim.

Bead separation
This is the breakdown of the bond between components in the bead.

Bias ply tire
A pneumatic tire in which the ply cords that extend to the beads are laid at alternate angles substantially less than 90 degrees to the centerline of the tread.

Carcass
The tire structure, except tread and sidewall rubber which, when inflated, bears the load.

Chunking
The breaking away of pieces of the tread or sidewall.

Cold inflation pressure
The pressure in the tire before you drive.

Cord
The strands forming the plies in the tire.

Cord separation
The parting of cords from adjacent rubber compounds.

Cracking
Any parting within the tread, sidewall, or inner liner of the tire extending to cord material.

CT
A pneumatic tire with an inverted flange tire and rim system in which the rim is designed with rim flanges pointed radially inward and the tire is designed to fit on the underside of the rim in a manner that encloses the rim flanges inside the air cavity of the tire.

Tire and Safety Information - Continued

Curb weight
The weight of a motor vehicle with standard equipment including the maximum capacity of fuel, oil, and coolant, and, if so equipped, air conditioning and additional weight optional engine.

Extra load tire
A tire designed to operate at higher loads and at higher inflation pressures than the corresponding standard tire.

Groove
The space between two adjacent tread ribs.

Gross Axle Weight Rating
The maximum weight that any axle can support, as published on the Certification / VIN label on the front left side of the trailer. Actual weight determined by weighing each axle on a public scale, with the trailer attached to the towing vehicle.

Gross Vehicle Weight Rating
The maximum weight of the fully loaded trailer, as published on the Certification / VIN label. Actual weight determined by weighing trailer on a public scale, without being attached to the towing vehicle.

Hitch Weight
The downward force exerted on the hitch ball by the trailer coupler.

Innerliner
The layer(s) forming the inside surface of a tubeless tire that contains the inflating medium within the tire.

Innerliner separation
The parting of the innerliner from cord material in the carcass.

Intended outboard sidewall
The sidewall that contains a white-wall, bears white lettering or bears manufacturer, brand, and/or model name molding that is higher or deeper than the same molding on the other sidewall of the tire or the outward facing sidewall of an asymmetrical tire that has a particular side that must always face outward when mounted on a vehicle.

Light truck (LT) tire
A tire designated by its manufacturer as primarily intended for use on lightweight trucks or multipurpose passenger vehicles.

Load rating
The maximum load that a tire is rated to carry for a given inflation pressure.

Maximum load rating
The load rating for a tire at the maximum permissible inflation pressure for that tire.

Maximum permissible inflation pressure
The maximum cold inflation pressure to which a tire may be inflated.

Maximum loaded vehicle weight
The sum of curb weight, accessory weight, vehicle capacity weight, and production options weight.

Measuring rim
The rim on which a tire is fitted for physical dimension requirements.

Pin Weight
The downward force applied to the 5th wheel or gooseneck ball, by the trailer kingpin or gooseneck coupler.

Non-pneumatic rim
A mechanical device which, when a non-pneumatic tire assembly incorporates a wheel, supports the tire, and attaches, either integrally or separably, to the wheel center member and upon which the tire is attached.

Non-pneumatic spare tire assembly
A non-pneumatic tire assembly intended for temporary use in place of one of the pneumatic tires and rims that are fitted to a passenger car in compliance with the requirements of this standard.

Tire and Safety Information - Continued

Non-pneumatic tire
A mechanical device which transmits, either directly or through a wheel or wheel center member, the vertical load and tractive forces from the roadway to the vehicle, generates the tractive forces that provide the directional control of the vehicle and does not rely on the containment of any gas or fluid for providing those functions.

Non-pneumatic tire assembly
A non-pneumatic tire, alone or in combination with a wheel or wheel center member, which can be mounted on a vehicle.

Normal occupant weight
This means 68 kilograms (150 lbs.) times the number of occupants specified in the second column of Table I of 49 CFR 571.110.

Occupant distribution
The distribution of occupants in a vehicle as specified in the third column of Table I of 49 CFR 571.110.

Open splice
Any parting at any junction of tread, sidewall, or innerliner that extends to cord material.

Outer diameter
The overall diameter of an inflated new tire.

Overall width
The linear distance between the exteriors of the sidewalls of an inflated tire, including elevations due to labeling, decorations, or protective bands or ribs.

Ply
A layer of rubber-coated parallel cords.

Ply separation
A parting of rubber compound between adjacent plies.

Pneumatic tire
A mechanical device made of rubber, chemicals, fabric and steel or other materials, that, when mounted on an automotive wheel, provides the traction and contains the gas or fluid that sustains the load.

Production options weight
The combined weight of those installed regular production options weighing over 2.3 kilograms (5 lbs.) in excess of those standard items which they replace, not previously considered in curb weight or accessory weight, including heavy duty brakes, ride levelers, roof rack, heavy duty battery, and special trim.

Radial ply tire
A pneumatic tire in which the ply cords that extend to the beads are laid at substantially 90 degrees to the centerline of the tread.

Recommended inflation pressure
This is the inflation pressure provided by the vehicle manufacturer on the Tire Information label and on the Certification / VIN tag.

Reinforced tire
A tire designed to operate at higher loads and at higher inflation pressures than the corresponding standard tire.

Rim
A metal support for a tire or a tire and tube assembly upon which the tire beads are seated.

Rim diameter
This means the nominal diameter of the bead seat.

Rim size designation
This means the rim diameter and width.

Tire and Safety Information - Continued

Rim type designation
This means the industry of manufacturer's designation for a rim by style or code.

Rim width
This means the nominal distance between rim flanges.

Section width
The linear distance between the exteriors of the sidewalls of an inflated tire, excluding elevations due to labeling, decoration, or protective bands.

Sidewall
That portion of a tire between the tread and bead.

Sidewall separation
The parting of the rubber compound from the cord material in the sidewall.

Special Trailer (ST) tire
The "ST" is an indication the tire is for trailer use only.

Test rim
The rim on which a tire is fitted for testing, and may be any rim listed as appropriate for use with that tire.

Tread
That portion of a tire that comes into contact with the road.

Tread rib
A tread section running circumferentially around a tire.

Tread separation
Pulling away of the tread from the tire carcass.

Treadwear indicators (TWI)
The projections within the principal grooves designed to give a visual indication of the degrees of wear of the tread.

Vehicle capacity weight
The rated cargo and luggage load plus 68 kilograms (150 lbs.) times the vehicle's designated seating capacity.

Vehicle maximum load on the tire
The load on an individual tire that is determined by distributing to each axle its share of the maximum loaded vehicle weight and dividing by two.

Vehicle normal load on the tire
The load on an individual tire that is determined by distributing to each axle its share of the curb weight, accessory weight, and normal occupant weight (distributed in accordance with Table I of CRF 49 571.110) and dividing by 2.

Weather side
The surface area of the rim not covered by the inflated tire.

Wheel center member
In the case of a non-pneumatic tire assembly incorporating a wheel, a mechanical device which attaches, either integrally or separably, to the non-pneumatic rim and provides the connection between the non-pneumatic rim and the vehicle; or, in the case of a non-pneumatic tire assembly not incorporating a wheel, a mechanical device which attaches, either integrally or separably, to the non-pneumatic tire and provides the connection between tire and the vehicle.

Wheel-holding fixture
The fixture used to hold the wheel and tire assembly securely during testing.

Tire and Safety Information - Continued

1.4. Tire Safety - Everything Rides On It

The National Traffic Safety Administration (NHTSA) has published a brochure (DOT HS 809 361) that discusses all aspects of Tire Safety, as required by CFR 575.6. This brochure is reproduced in part below. It can be obtained and downloaded from NHTSA, free of charge, from the following web site:

http://www.nhtsa.dot.gov/cars/rules/TireSafety/ridesonit/tires_index.html

Studies of tire safety show that maintaining proper tire pressure, observing tire and vehicle load limits (not carrying more weight in your vehicle than your tires or vehicle can safely handle), avoiding road hazards, and inspecting tires for cuts, slashes, and other irregularities are the most important things you can do to avoid tire failure, such as tread separation or blowout and flat tires. These actions, along with other care and maintenance activities, can also:

- Improve vehicle handling
- Help protect you and others from avoidable breakdowns and accidents
- Improve fuel economy
- Increase the life of your tires.

This area presents a comprehensive overview of tire safety, including information on the following topics:

- Basic tire maintenance
- Uniform Tire Quality Grading System
- Fundamental characteristics of tires
- Tire safety tips.

Use this information to make tire safety a regular part of your vehicle maintenance routine. Recognize that the time you spend is minimal compared with the inconvenience and safety consequences of a flat tire or other tire failure.

1.5. Safety First–Basic Tire Maintenance

Properly maintained tires improve the steering, stopping, traction, and load-carrying capability of your vehicle. Underinflated tires and overloaded vehicles are a major cause of tire failure. Therefore, as mentioned above, to avoid flat tires and other types of tire failure, you should maintain proper tire pressure, observe tire and vehicle load limits, avoid road hazards, and regularly inspect your tires.

1.5.1. Finding Your Vehicle's Recommended Tire Pressure and Load Limits

Tire information placards and vehicle certification labels contain information on tires and load limits. These labels indicate the vehicle manufacturer's information including:

- Recommended tire size
- Recommended tire inflation pressure
- Vehicle capacity weight (VCW–the maximum occupant and cargo weight a vehicle is designed to carry)
- Front and rear gross axle weight ratings (GAWR– the maximum weight the axle systems are designed to carry).

Both placards and certification labels are permanently attached to the trailer near the left front.

1.5.2. Understanding Tire Pressure and Load Limits

Tire inflation pressure is the level of air in the tire that provides it with load-carrying capacity and affects the overall performance of the vehicle. The tire inflation pressure is a number that indicates the amount of air pressure– measured in pounds per square inch (psi)–a tire requires to be properly inflated. (You will also find this number on the vehicle information placard expressed in kilopascals (kpa), which is the metric measure used internationally.)

Tire and Safety Information - Continued

Manufacturers of passenger vehicles and light trucks determine this number based on the vehicle's design load limit, that is, the greatest amount of weight a vehicle can safely carry and the vehicle's tire size. The proper tire pressure for your vehicle is referred to as the "recommended cold inflation pressure." (As you will read below, it is difficult to obtain the recommended tire pressure if your tires are not cold.)

Because tires are designed to be used on more than one type of vehicle, tire manufacturers list the "maximum permissible inflation pressure" on the tire sidewall. This number is the greatest amount of air pressure that should ever be put in the tire under normal driving conditions.

1.5.3. Checking Tire Pressure

It is important to check your vehicle's tire pressure at least once a month for the following reasons:

- Most tires may naturally lose air over time.
- Tires can lose air suddenly if you drive over a pothole or other object or if you strike the curb when parking.
- With radial tires, it is usually not possible to determine underinflation by visual inspection.

For convenience, purchase a tire pressure gauge to keep in your vehicle. Gauges can be purchased at tire dealerships, auto supply stores, and other retail outlets.

The recommended tire inflation pressure that vehicle manufacturers provide reflects the proper psi when a tire is cold.

The term cold does not relate to the outside temperature. Rather, a cold tire is one that has not been driven on for at least three hours. When you drive, your tires get warmer, causing the air pressure within them to increase. Therefore, to get an accurate tire pressure reading, you must measure tire pressure when the tires are cold or compensate for the extra pressure in warm tires.

1.5.4. Steps for Maintaining Proper Tire Pressure

Step 1: Locate the recommended tire pressure on the vehicle's tire information placard, certification label, or in the owner's manual.

Step 2: Record the tire pressure of all tires.

Step 3: If the tire pressure is too high in any of the tires, slowly release air by gently pressing on the tire valve stem with the edge of your tire gauge until you get to the correct pressure.

Step 4: If the tire pressure is too low, note the difference between the measured tire pressure and the correct tire pressure. These "missing" pounds of pressure are what you will need to add.

Step 5: At a service station, add the missing pounds of air pressure to each tire that is underinflated.

Step 6: Check all the tires to make sure they have the same air pressure (except in cases in which the front and rear tires are supposed to have different amounts of pressure).

If you have been driving your vehicle and think that a tire is underinflated, fill it to the recommended cold inflation pressure indicated on your vehicle's tire information placard or certification label. While your tire may still be slightly underinflated due to the extra pounds of pressure in the warm tire, it is safer to drive with air pressure that is slightly lower than the vehicle manufacturer's recommended cold inflation pressure than to drive with a significantly underinflated tire. Since this is a temporary fix, don't forget to recheck and adjust the tire's pressure when you can obtain a cold reading.

1.5.5. Tire Size

To maintain tire safety, purchase new tires that are the same size as the vehicle's original tires or another size recommended by the manufacturer. Look at the tire information placard, the owner's manual, or the sidewall of the tire you are replacing to find this information. If you have any doubt about the correct size to choose, consult with the tire dealer.

Tire and Safety Information - Continued

1.5.6. Tire Tread

The tire tread provides the gripping action and traction that prevent your vehicle from slipping or sliding, especially when the road is wet or icy. In general, tires are not safe and should be replaced when the tread is worn down to 1/16 of an inch. Tires have built-in treadwear indicators that let you know when it is time to replace your tires. These indicators are raised sections spaced intermittently in the bottom of the tread grooves. When they appear "even" with the outside of the tread, it is time to replace your tires. Another method for checking tread depth is to place a penny in the tread with Lincoln's head upside down and facing you. If you can see the top of Lincoln's head, you are ready for new tires.

1.5.7. Tire Balance and Wheel Alignment

To avoid vibration or shaking of the vehicle when a tire rotates, the tire must be properly balanced. This balance is achieved by positioning weights on the wheel to counterbalance heavy spots on the wheel-and-tire assembly. A wheel alignment adjusts the angles of the wheels so that they are positioned correctly relative to the vehicle's frame. This adjustment maximizes the life of your tires. These adjustments require special equipment and should be performed by a qualified technician.

1.5.8. Tire Repair

The proper repair of a punctured tire requires a plug for the hole and a patch for the area inside the tire that surrounds the puncture hole. Punctures through the tread can be repaired if they are not too large, but punctures to the sidewall should not be repaired. Tires must be removed from the rim to be properly inspected before being plugged and patched.

1.5.9. Tire Fundamentals

Federal law requires tire manufacturers to place standardized information on the sidewall of all tires. This information identifies and describes the fundamental characteristics of the tire and also provides a tire identification number for safety standard certification and in case of a recall.

1.5.9.1. Information on Passenger Vehicle Tires

P
The "P" indicates the tire is for passenger vehicles.

Next number
This three-digit number gives the width in millimeters of the tire from sidewall edge to sidewall edge. In general, the larger the number, the wider the tire.

Next number
This two-digit number, known as the aspect ratio, gives the tire's ratio of height to width. Numbers of 70 or lower indicate a short sidewall for improved steering response and better overall handling on dry pavement.

R
The "R" stands for radial. Radial ply construction of tires has been the industry standard for the past 20 years.

Next number
This two-digit number is the wheel or rim diameter in inches. If you change your wheel size, you will have to purchase new tires to match the new wheel diameter.

Next number
This two- or three-digit number is the tire's load index. It is a measurement of how much weight each tire can support. You may find this information in your owner's manual. If not, contact a local tire dealer. Note: You may not find this information on all tires because it is not required by law.

M+S
The "M+S" or "M/S" indicates that the tire has some mud and snow capability. Most radial tires have these markings; hence, they have some mud and snow capability.

Tire and Safety Information - Continued

Speed Rating

The speed rating denotes the speed at which a tire is designed to be driven for extended periods of time. The ratings range from 99 miles per hour (mph) to 186 mph. These ratings are listed below. Note: You may not find this information on all tires because it is not required by law.

Letter Rating	Speed Rating
Q	99 mph
R	106 mph
S	112 mph
T	118 mph
U	124 mph
H	130 mph
V	149 mph
W	168* mph
Y	186* mph

* For tires with a maximum speed capability over 149 mph, tire manufacturers sometimes use the letters ZR. For those with a maximum speed capability over 186 mph, tire manufacturers always use the letters ZR.

U.S. DOT Tire Identification Number
This begins with the letters "DOT" and indicates that the tire meets all federal standards. The next two numbers or letters are the plant code where it was manufactured, and the last four numbers represent the week and year the tire was built. For example, the numbers 3197 means the 31st week of 1997. The other numbers are marketing codes used at the manufacturer's discretion. This information is used to contact consumers if a tire defect requires a recall.

Tire Ply Composition and Materials Used
The number of plies indicates the number of layers of rubber-coated fabric in the tire. In general, the greater the number of plies, the more weight a tire can support. Tire manufacturers also must indicate the materials in the tire, which include steel, nylon, polyester, and others.

Maximum Load Rating
This number indicates the maximum load in kilograms and pounds that can be carried by the tire.

Maximum Permissible Inflation Pressure
This number is the greatest amount of air pressure that should ever be put in the tire under normal driving conditions.

1.5.9.2. UTQGS Information

Treadwear Number
This number indicates the tire's wear rate. The higher the treadwear number is, the longer it should take for the tread to wear down. For example, a tire graded 400 should last twice as long as a tire graded 200.

Traction Letter
This letter indicates a tire's ability to stop on wet pavement. A higher graded tire should allow you to stop your car on wet roads in a shorter distance than a tire with a lower grade. Traction is graded from highest to lowest as "AA","A", "B", and "C".

Temperature Letter
This letter indicates a tire's resistance to heat. The temperature grade is for a tire that is inflated properly and not overloaded. Excessive speed, underinflation or excessive loading, either separately or in combination, can cause heat build-up and possible tire failure. From highest to lowest, a tire's resistance to heat is graded as "A", "B", or "C".

Tire and Safety Information - Continued

1.5.9.3. Additional Information on Light Truck Tires

Please refer to the following diagram.

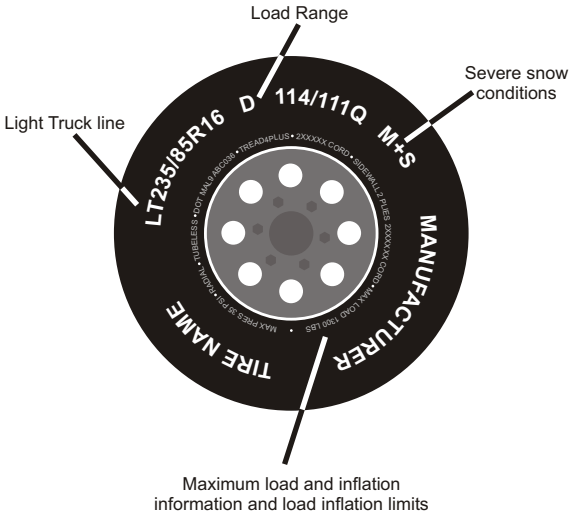

Tires for light trucks have other markings besides those found on the sidewalls of passenger tires.

LT
The "LT" indicates the tire is for light trucks or trailers.

ST
An "ST" is an indication the tire is for trailer use only.

Max. Load Dual kg (lbs) at kPa (psi) Cold
This information indicates the maximum load and tire pressure when the tire is used as a dual, that is, when four tires are put on each rear axle (a total of six or more tires on the vehicle).

Max. Load Single kg (lbs) at kPa (psi) Cold
This information indicates the maximum load and tire pressure when the tire is used as a single.

Load Range
This information identifies the tire's load-carrying capabilities and its inflation limits.

1.6. Tire Safety Tips

Preventing Tire Damage

- Slow down if you have to go over a pothole or other object in the road.
- Do not run over curbs or other foreign objects in the roadway, and try not to strike the curb when parking.

Tire Safety Checklist

- Check tire pressure regularly (at least once a month), including the spare.
- Inspect tires for uneven wear patterns on the tread, cracks, foreign objects, or other signs of wear or trauma.
- Remove bits of glass and foreign objects wedged in the tread.
- Make sure your tire valves have valve caps.
- Check tire pressure before going on a long trip.
- Do not overload your vehicle. Check the Tire Information and Loading Placard or User’s Manual for the maximum recommended load for the vehicle.

More information may be found at http://www.natm.com.

Jacks

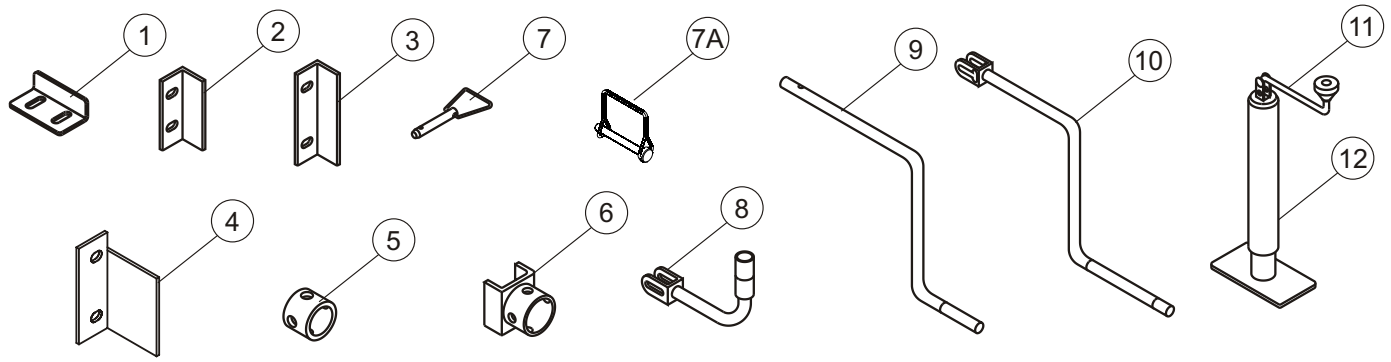

Note which way pin pulls when ordering (from side or from rear).

Item	Part #	Description
1	06-0535	6" mounting bracket (formed)
2	01-0060	6" mounting bracket (2 x 2 angle)
3	01-0062	8" mounting bracket (2 x 2 angle)
	01-0063	8" mounting bracket (5 x 3 angle)
4	06-1690	special mounting bracket (25K jacks)
5	33-5013	mounting bracket, male (5K swing-up jack)
6	33-5011	mounting bracket, female (5K swing-up jack)
7	37-0230	replacement pin, 7K drop-leg jack
7a	33-5156	5/8 x 3 3/8 Buttler jack pin
8	33-5034	replacement jack hand (12K top wind jack)
9	33-5031	jack handle
10	33-5045	jack handle
11	33-5009	replacement handle only, 5K swing-up jack
12	33-5007	5K swing-up jack (with handle, no brackets)
	33-5005	5K swing-up jack, complete with mounting brackets

Jacks

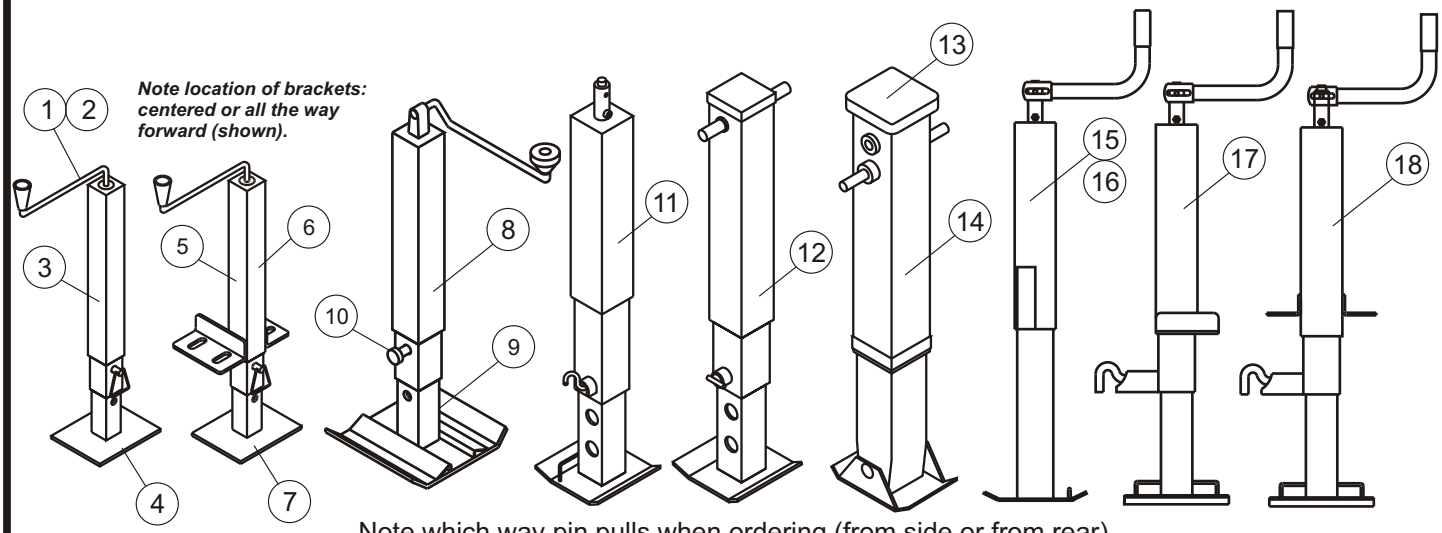

Note which way pin pulls when ordering (from side or from rear).

Item	Part #	Description
1	33-5021	replacement handle only, 7K drop-leg jack
2	33-5154	replacement handle for Butler 7K drop-leg jack
3	33-5020	7K drop-leg jack, 10", with handle, base and pin
	33-5019	7K drop-leg jack, 15", with handle, base and pin
4	33-5023	replacement base only, 7K drop-leg jack
5	33-5022	7K drop-leg jack, complete assembly with 6" formed brackets (10" jack)
6	33-5018	7K drop-leg jack, complete assembly with 6" formed brackets (15" jack)
7	33-5155	Buttler jack base
8	33-5150	10K top-wind jack
9	33-5151	leg only for 10K top-wind jack
10	33-5152	pin only for 10K top-wind jack
	12-0564	10K top-wind jack with 6" formed brackets
11	33-5036	12K top-wind jack only
12	33-5037	12K drop-leg jack only, long, side wind (specify side pull or front pull drop-leg pin)
	33-5033	12K drop-leg jack with 6" angle iron brackets, side wind
	33-5035	12K drop-leg jack with 8" angle iron brackets, side wind
13	33-5051	plastic replacement top only, with bolts (for 25K Jost jack)
14	33-5049	25K, 2 speed jack
	33-5047	25K, 2 speed jack with 2 x 2 x 8" long angle iron brackets
	33-5046	25K, 2 speed jack with 5 x 3 x 8" long angle iron brackets
15	33-5038	12K top-wind jack, 6" vertical brackets (B-8PRS, B-9PRS stabilizer jack)
16	33-5028	12K top-wind jack, 8" vertical brackets (large DD's)
17	33-5042	12K top-wind jack, 6" formed brackets, rear pull pin, for B-3.5P, B-5P
18	33-5040	12K top-wind jack, 6" formed brackets, left hand pull pin (small DD models, B-5T-->B-7T)

Hitches and Couplers

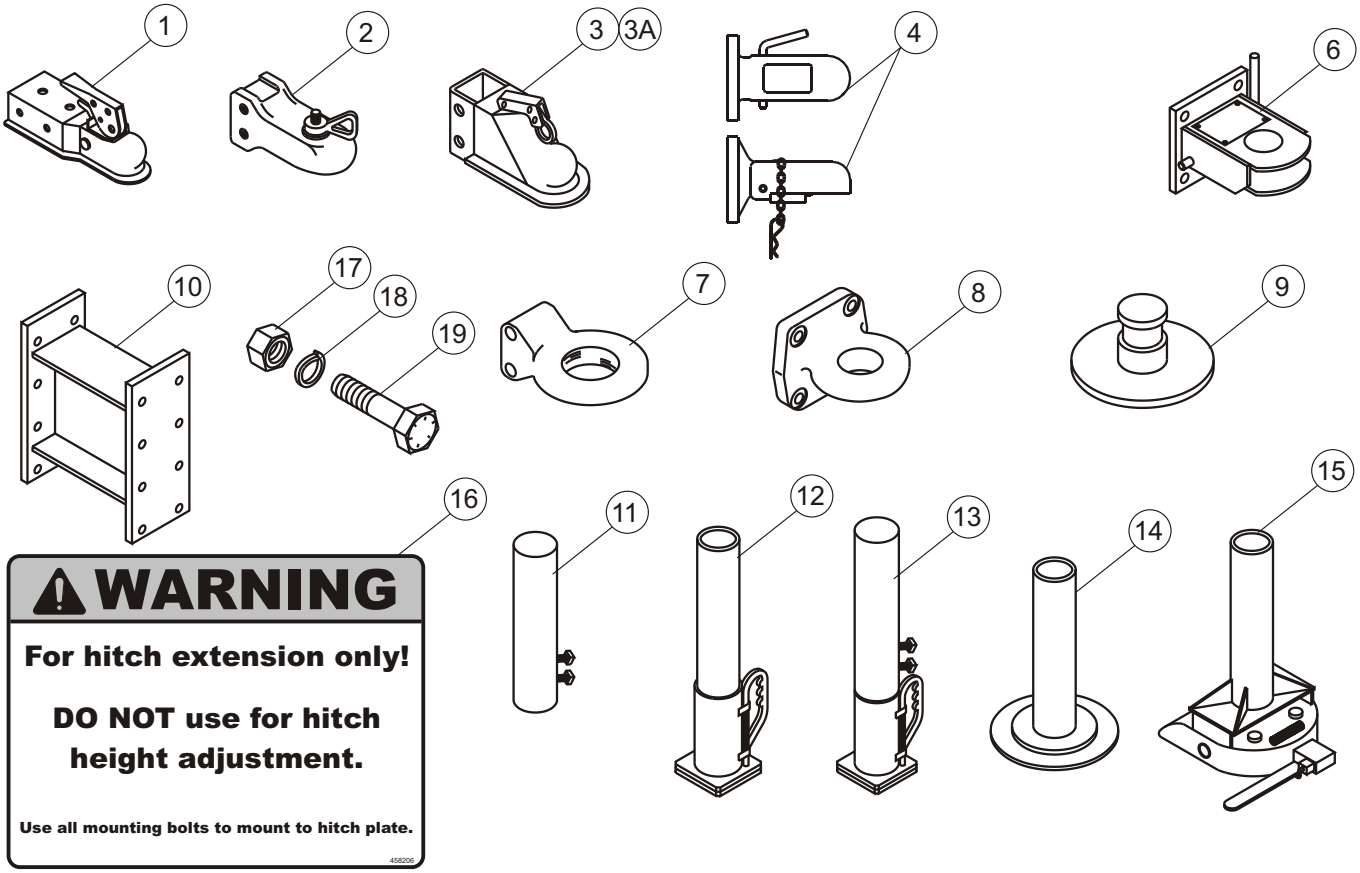

Item	Part #	Description
1	33-7042	2" ball coupler, for 3" square
	33-7044	repair kit for 2" ball coupler (33-7042)
2	33-0006	2" ball coupler, cast, 2 bolt
	33-0008	repair kit for 2" cast ball coupler (33-0006)
3	33-0010	2 5/16" ball coupler, fits inside adjustment channel
3A	33-0009	2" ball coupler, fits inside adjustment channel
	33-0012	repair kit for 2" ball coupler and 2 5/16" ball couplers
4	33-0015	2 5/16” ball coupler, 4 bolt, 25,000 lb. capacity (Wallace-Forge)
6	33-0035	2 5/16" ball coupler (25,000 lb. capacity)
7	33-0004	3" i.d. lunette eye, 2 bolt (pintle ring)
8	33-0050	3" i.d. pintle ring, 4 bolt
9	33-2809	2" king pin
10	12-0340	12" hitch extension, any model with 4 bolt pintle ring, 24,000 lb. capacity (Do not use for hitch height adjustment!)
	12-0342	12" hitch extension, heavy duty (Do not use for hitch height adjustment!)
11	33-0029	replacement outer tube assembly (for goosenecks)
12	33-0028	2 5/16" coupler, inner section only
13	33-0027	2 5/16" coupler, complete assembly (30,000 lb. capacity)
14	33-0030	2" king pin assembly, inner section only
15	33-0032	inverted 5th wheel assembly, inner section only
16	45-8206	decal, warning, hitch extension, FOR USE w/ P/N 120340 OR 120342
17	36-0402	nut, 5/8" n.c., grade 8
18	36-0408	washer, 5/8", lock, grade 8
19	36-0403	bolt, 5/8" x 1 1/2", n.c., gr. 8
	36-0132	bolt, 5/8" x 2 1/4”, n.c., gr. 8
	36-0400	bolt, 5/8" x 4 1/2", n.c., gr. 8

Hydraulic Actuator (DA10)

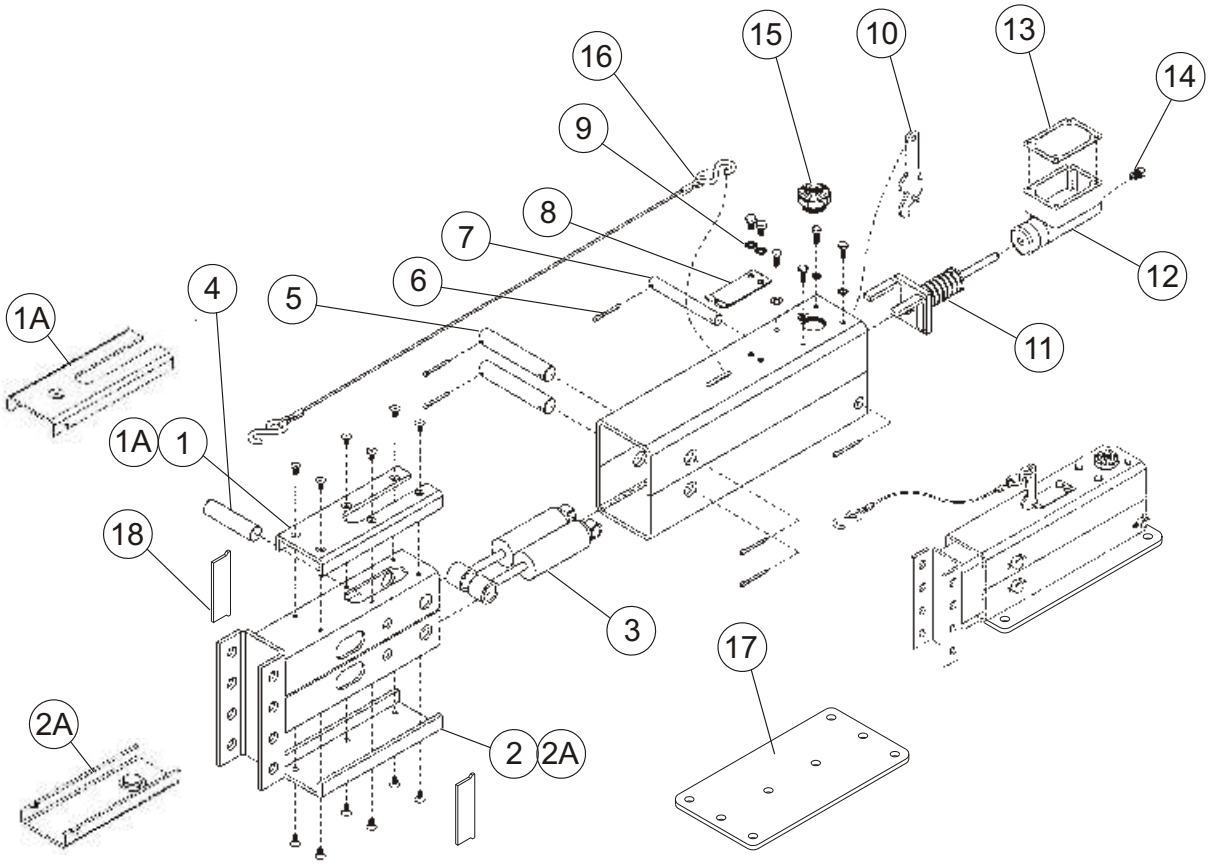

Item	Part #	Description
	35-2090	10,000 lb. actuator, complete assembly w/ plate
1	35-2103	top wear pad, old style without notch
1A	35-2104	top wear pad, new style with notch
2	35-2105	bottom wear pad, old style without notch
2A	35-2106	bottom wear pad, new style with notch
3	35-2006	damper shock
4	35-2107	front shock pin
5	35-2109	connecting pin
6	37-0237	5/32" x 1 1/2" cotter pin
7	35-2111	rear shock pin
8	35-2014	emergency lever spring
9	36-0103	5/16" external tooth lock washer
10	35-2016	emergency lever
11	35-2113	push rod assembly
12	35-2020	master cylinder
13	35-2022	replacement master cylinder gasket
14	35-2024	1/8" pipe - 3/16" inverted flare fitting
15	35-2026	master cylinder cap
16	35-2028	3/32" cable with hooks on both ends
17	06-0966	plate only, actuator mount
18	35-3910	spacer block
	35-2030	emergency lever guard (not shown)

Hydraulic Actuator (DA20)

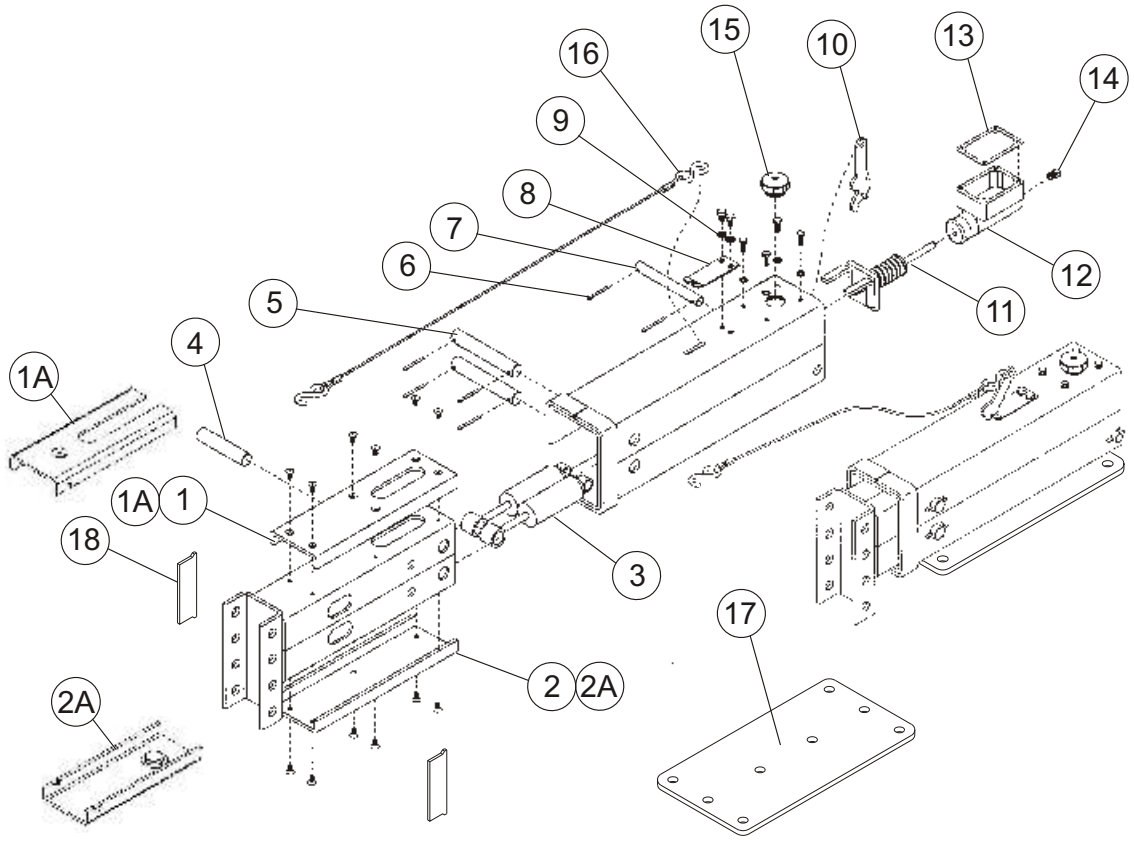

Item	Part #	Description
	35-2080	20,000 lb. actuator, complete assembly w/ plate
1	35-2002	top wear pad, old style without notch
1A	35-2003	top wear pad, new style with notch
2	35-2004	bottom wear pad, old style without notch
2A	35-2005	bottom wear pad, new style with notch
3	35-2006	damper shock
4	35-2008	front shock pin
5	35-2010	connecting pin
6	37-0237	5/32" x 1 1/2" cotter pin
7	35-2012	rear shock pin
8	35-2014	emergency lever spring
9	36-0103	5/16" external tooth lock washer
10	35-2016	emergency lever
11	35-2018	push rod assembly
12	35-2020	master cylinder
13	35-2022	replacement master cylinder gasket
14	35-2024	1/8" pipe - 3/16" inverted flare fitting
15	35-2026	master cylinder cap
16	35-2028	3/32" cable with hooks on both ends
17	06-0966	plate only, actuator mount
18	35-3910	spacer block
	35-2030	emergency lever guard (not shown)

Dexter Electric/Hydraulic Actuator

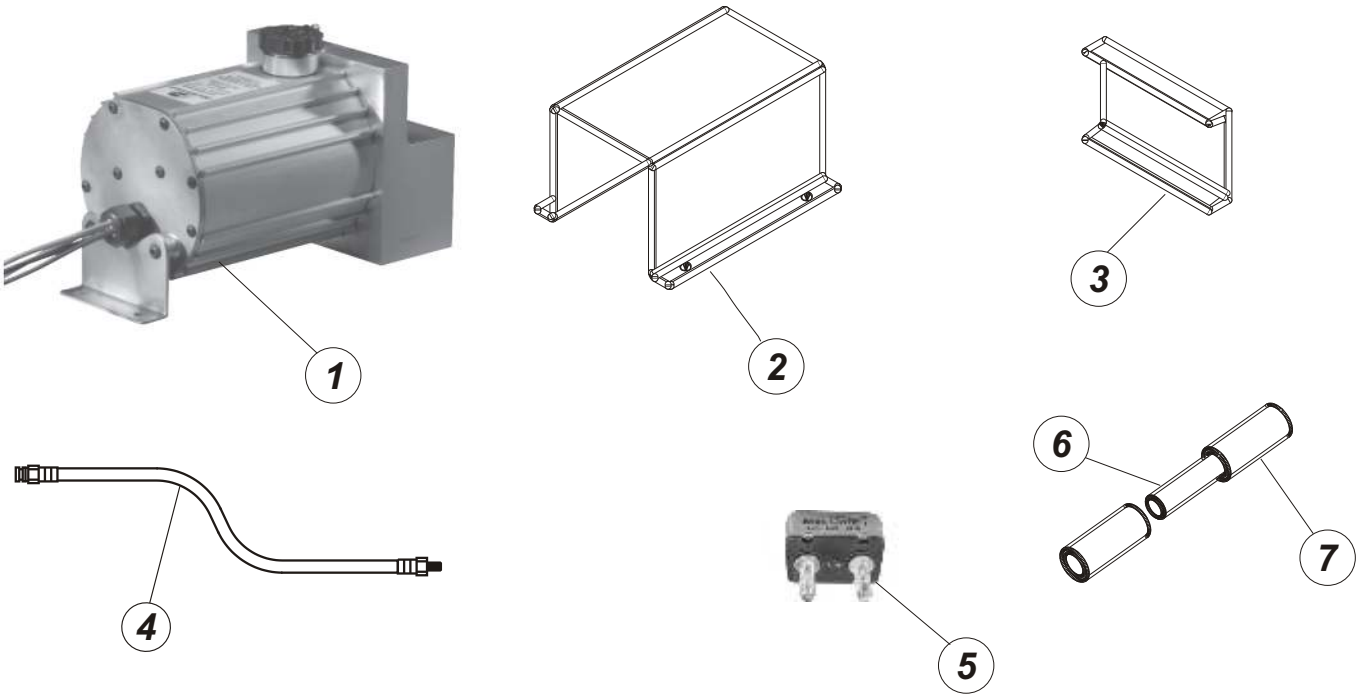

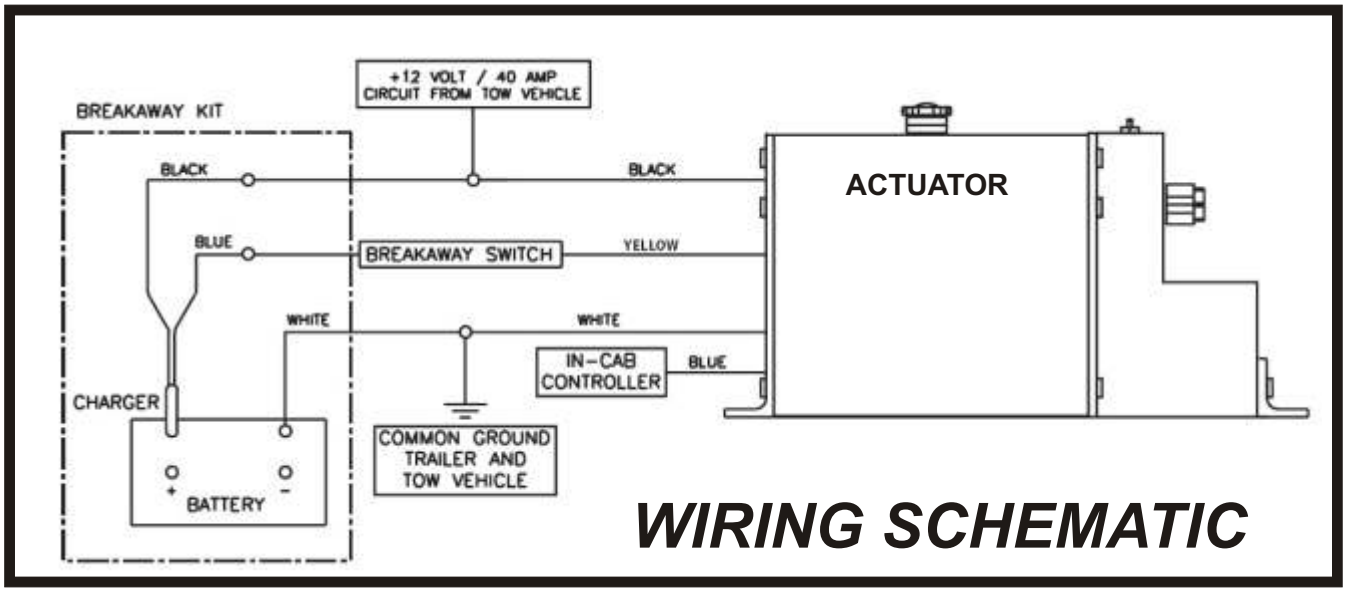

Item	Part #	Description
1	35-5031	Actuator
2	06-6052	Cover
3	03-2015	Mounting Plate for Gooseneck Models
4	35-3012	Long steel hyd. line (from actuator to axles)
5	39-6401	12Volt/ 30Amp Breaker
6	07-0006	Hinge Rod
7	08-0028	Hinge
	35-3000	Complete Hydraulic Line Fitting Kit

Lighting, Batteries, Battery Boxes

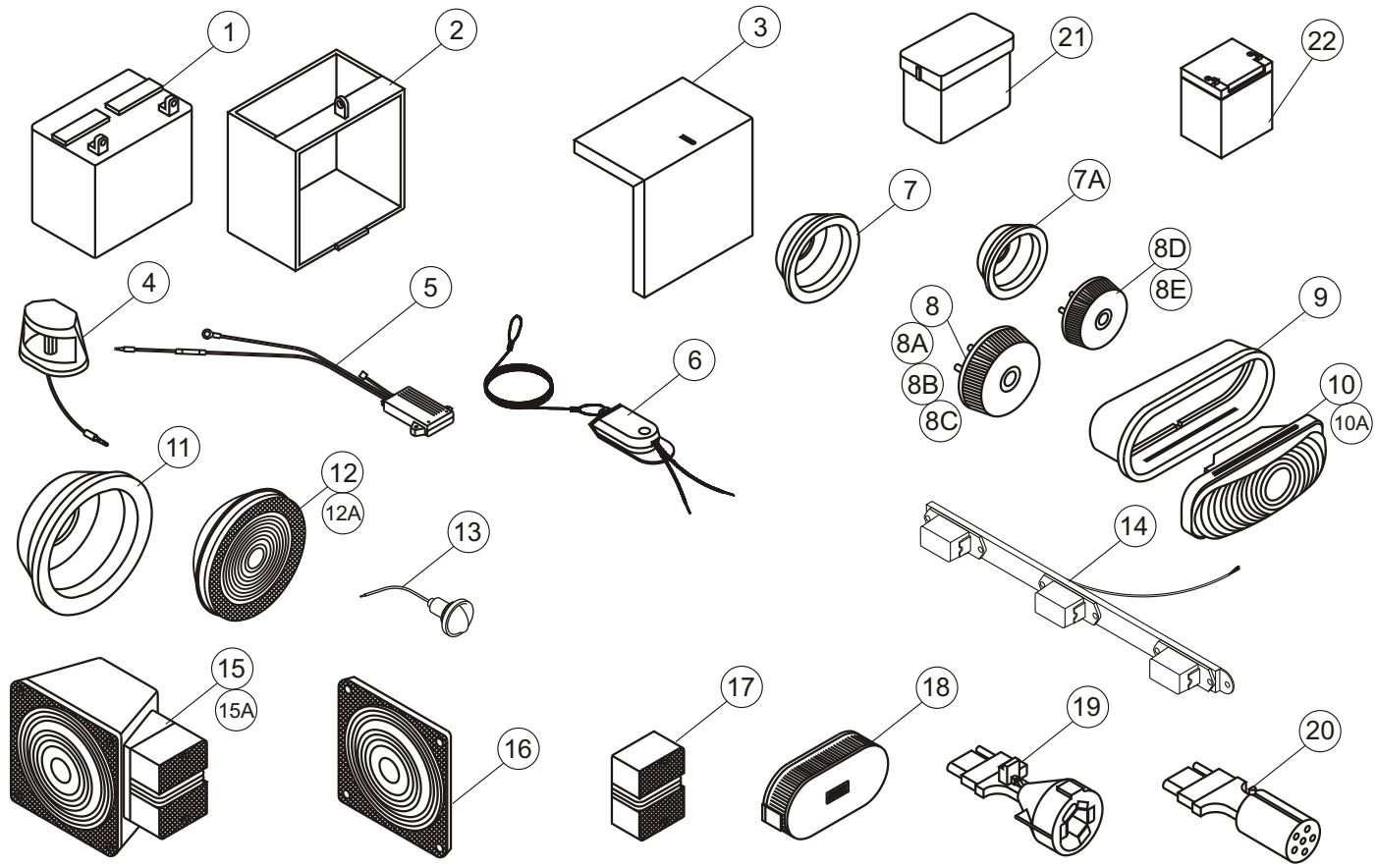

Item	Part #	Description		
1	35-1800	12V wet cell battery (cannot ship UPS)		
2	35-1803	stainless steel battery box bottom only		
3	35-1802	stainless steel battery box lid only		
	35-1801	stainless steel battery box (bottom and lid)		
4	39-3011	license plate i.d. light		
5	35-1804	tow charger		
6	35-0201	break-a-way switch		
7	39-3005	marker light mounting grommet, 2 ½”round, recessed mount		
7A	39-0158	marker light mounting grommet, 2” round, recessed mount (BE-5P, “BL" tailboard only)		
8	39-3007	amber marker light, 2 ½”round		
8A	39-2745	amber marker light, 2 ½”round L.E.D.		
8B	39-3009	red marker light, 2 ½”round		
8C	39-2740	red marker light, 2 ½”round L.E.D.		
8D	39-0156	red marker light, 2” round (C-10P, "BL" tailboard only)		
8E	39-0156	red marker light, 2” round L.E.D. (C-10P, "BL" tailboard only)		
9	39-3001	tail light mounting grommet		
10	39-3003	tail light		
10A	39-2760	tail light L.E.D.		
11	39-3022	tail light mounting grommet, 4 1/2" round		
12	39-3016	tail light, 4 1/2" round		
12A	39-3016A	tail light, 4 1/2" round L.E.D	35-0909	Carlisle brake controller
13	39-3008	license plate i.d. light (pop-in style)	35-0230	battery for Carlisle system
14	39-3019	1" tri-light bar	39-6240	remote switch for Carlisle system
15	39-3013A	r.h. tail light (replaces 39-3013 & 39-3029) B-1T only	35-1808	break-away battery charger system
15A	39-3015A	l.h. tail light (replaces 39-3015 & 39-3028) B-1T only	35-1810	battery box for Carlisle system
16	39-3017A	tail light replacement lense only		
17	39-3025A	side light replacement lense only		
18	39-3021	amber front marker light		
	39-3023	amber front marker light replacement lense only		
19	39-0051	adapter, 7-way RV receptacle to 4-way flat		
20	39-0056	adapter, 6-way round to 4-way flat		
21	35-0211	plastic battery box, for small gel-cell sealed battery		
22	35-0203	12V sealed battery		

Wiring Harness

Used on these models: BE-3.5, BE-3.5A, BE-5, BE-5P, BE-6P, BE-5A, BE-7, BE-5BL, BE-6BL, BE-7

Model B-1T uses its own harness: p/n 39-0201 (not shown).

Note: Line up arrows on harness for proper installation.

390011 - 4-way trailer end lead only with 12" wire

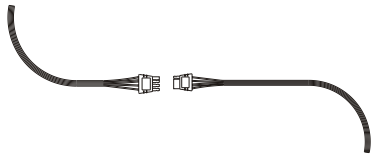

p/n: 390016 - 4-way truck end lead only with 48" wire

395005 - 6 pole trailer plug only

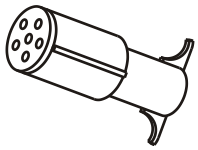

399023 - 7 pole trailer plug only

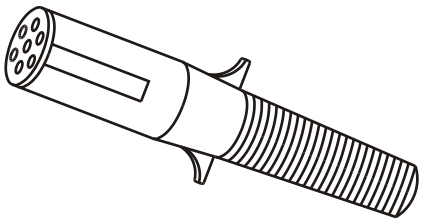

390046 - RV trailer plug only

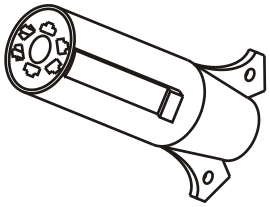

397220 - 7 pole RV nose lead (not shown)

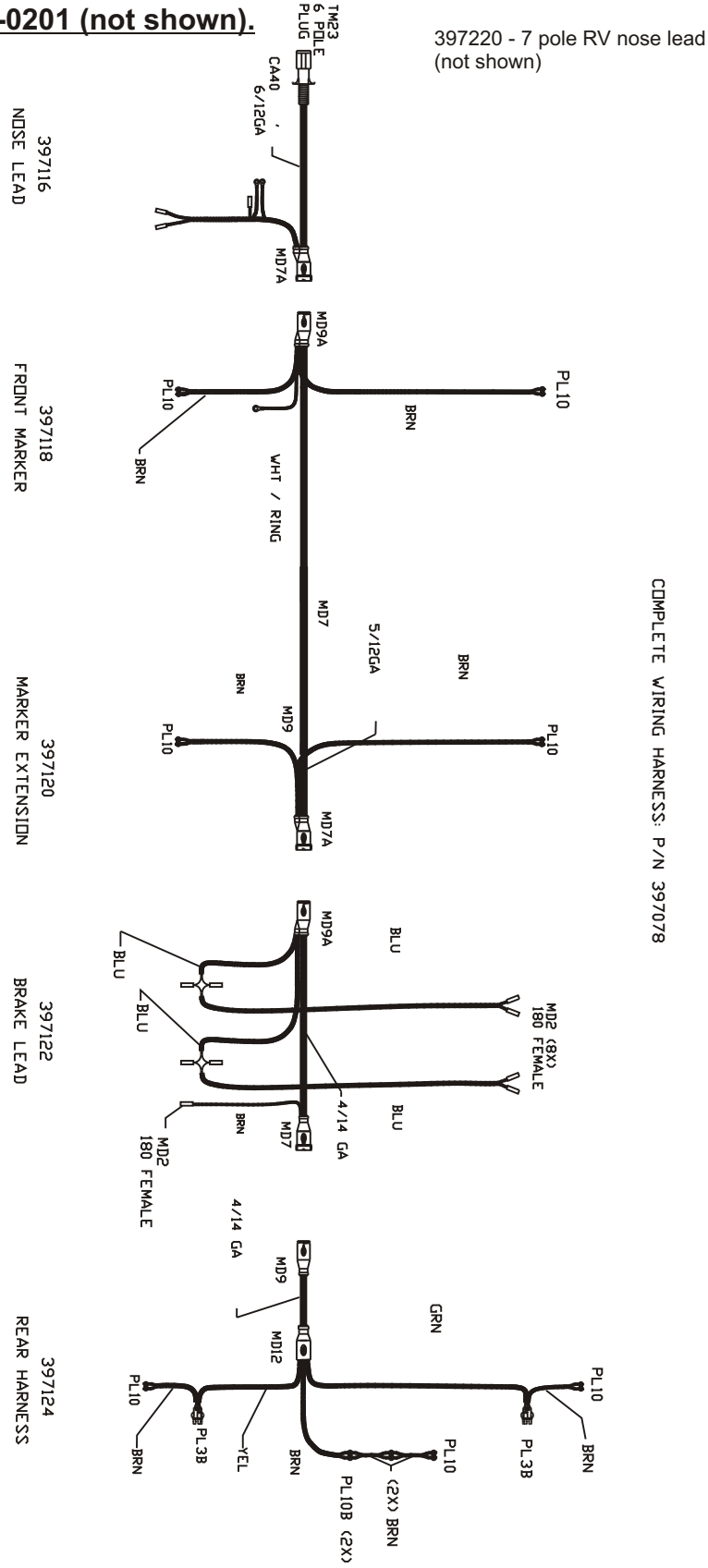

NOTE: CONNECT ALL WIRES COLOR TO COLOR, UNLESS OTHERWISE SPECIFIED. DRAWING IS NOT TO SCALE.

397202 - locking ring (not shown)

Used on these models:B-5LS, B-6LS, B-7LS

397220 - 7 pole RV nose lead (not shown)

Note: Line up arrows on harness for proper installation.

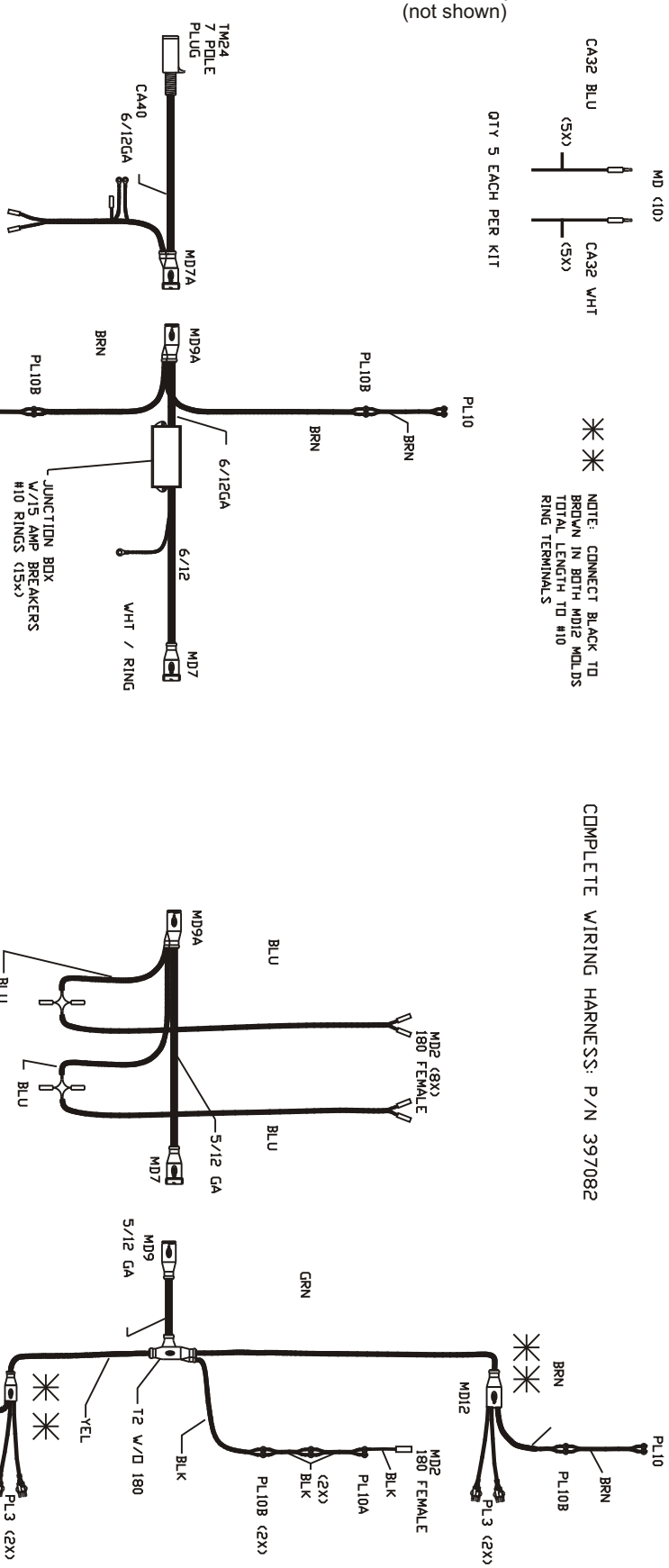

395005 - 6 pole trailer plug only

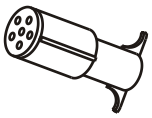

399023 - 7 pole trailer plug only

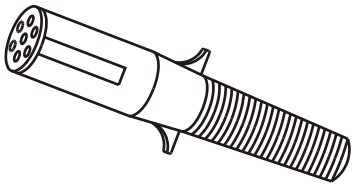

390046 - RV trailer plug only

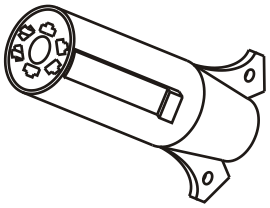

397202 - locking ring (not shown)

Wiring Harness

Used on these models: B-1.75T, B-2.5T, B-3.5P, B-5P, B-5, B-6

397220 - 7 pole RV nose lead (not shown)

Note: Line up arrows on harness for proper installation.

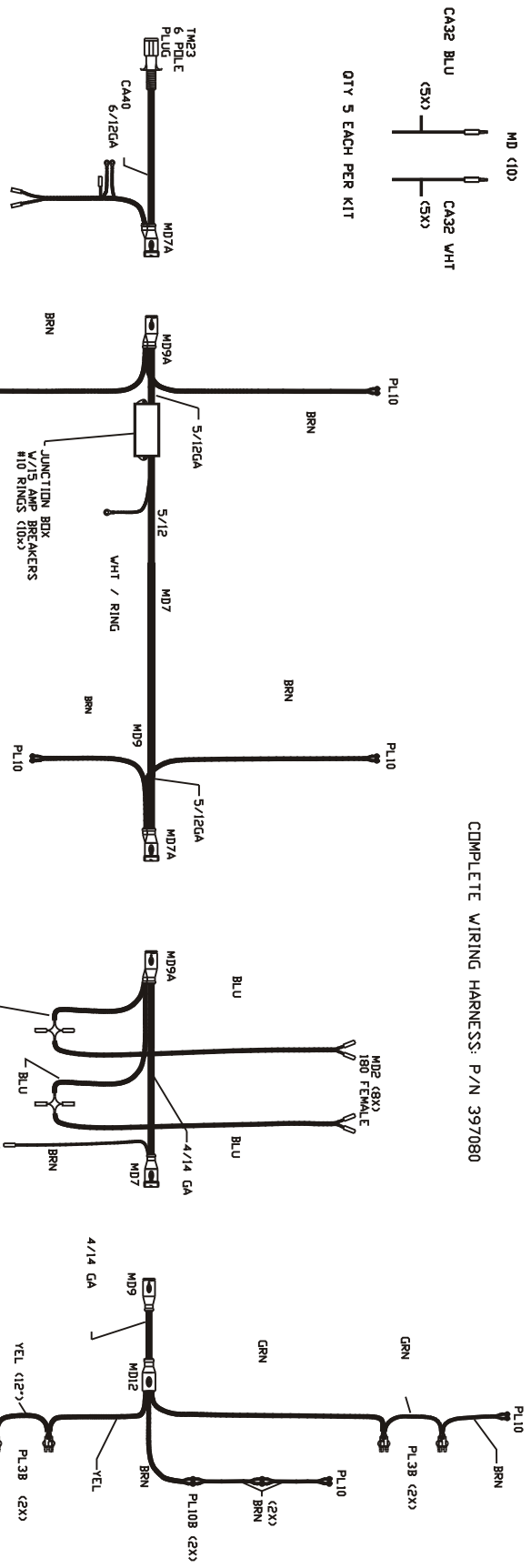

395005 - 6 pole trailer plug only

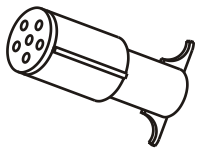

399023 - 7 pole trailer plug only

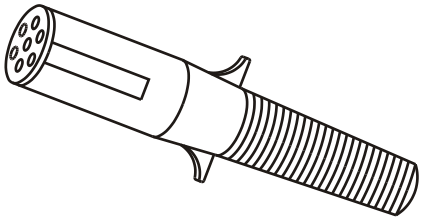

390046 - RV trailer plug only

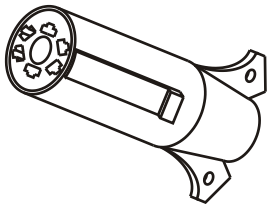

397202 - locking ring (not shown)

Wiring Harness

Used on these models: B-7, B-8, B-9, B-9B, B-8PRS, B-9PRS, B-7B, B-8B, B-9B

Complete wiring harness: p/n 397098

397220 - 7 pole RV nose lead (not shown)

Note: Line up arrows on harness for proper installation.

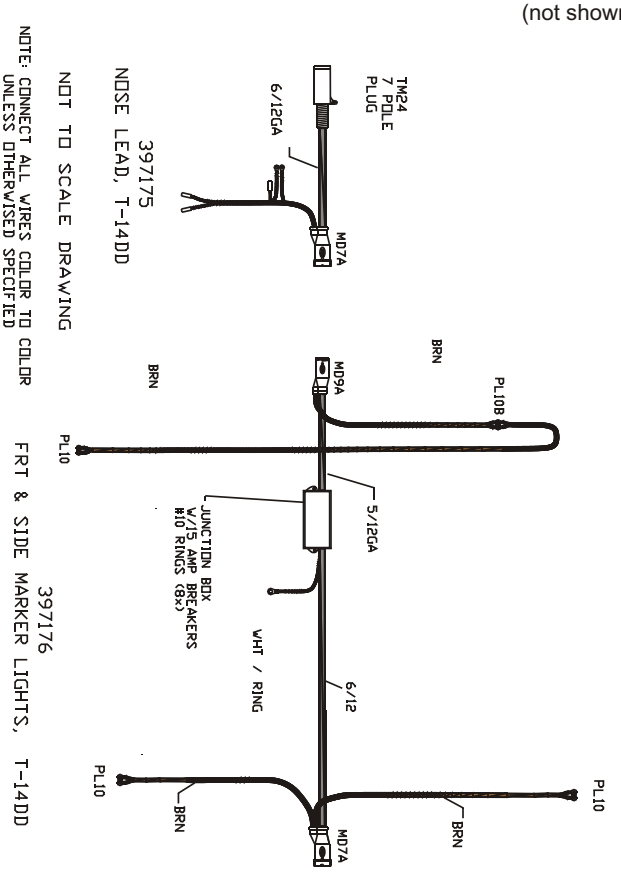

395005 - 6 pole trailer plug only

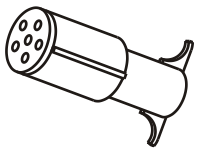

399023 - 7 pole trailer plug only

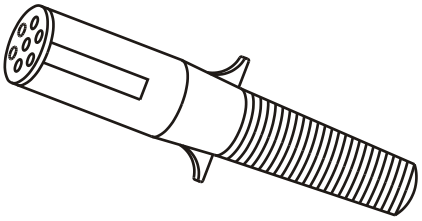

390046 - RV trailer plug only

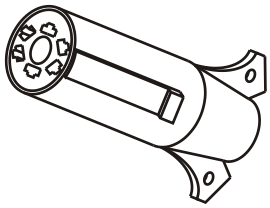

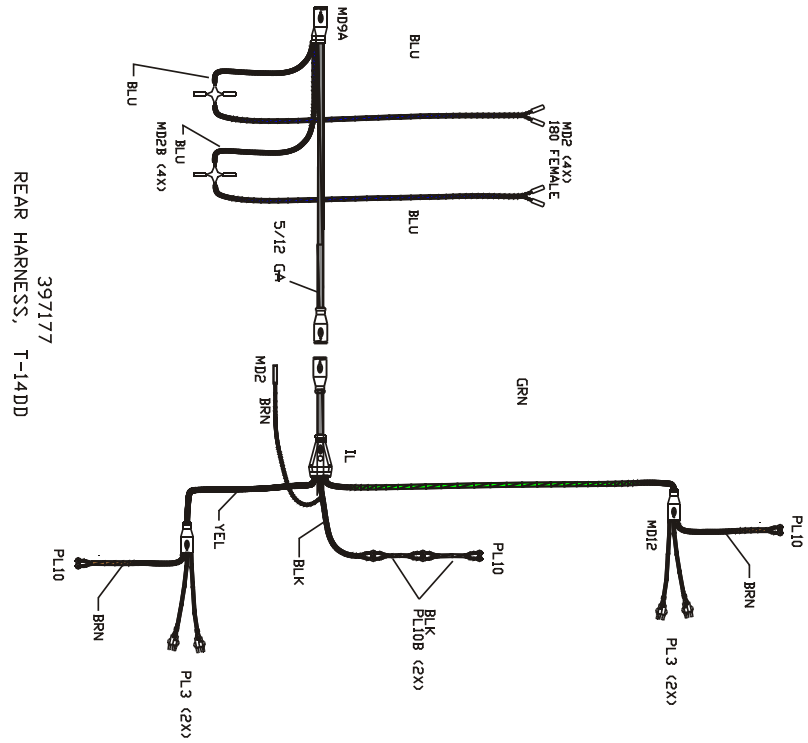

397202 - locking ring (not shown)

Wiring Harness

Used on these models: B-5T, B-6T, B-7T

397220 - 7 pole RV nose lead (not shown)

Note: Line up arrows on harness for proper installation.

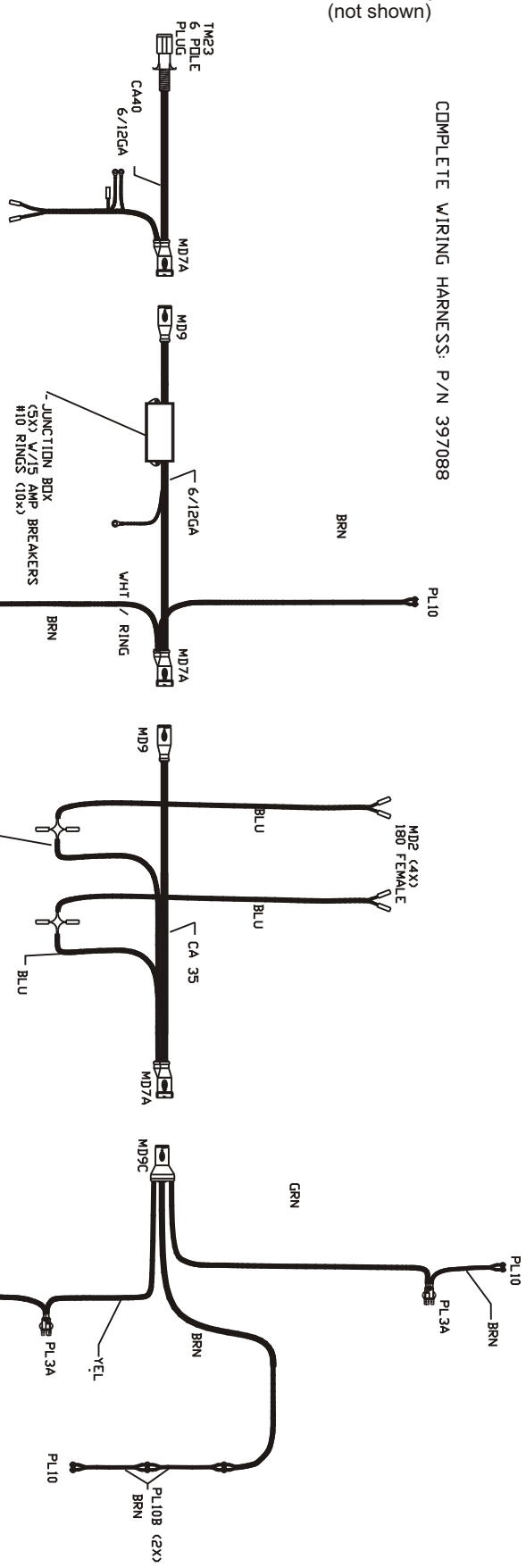

395005 - 6 pole trailer plug only

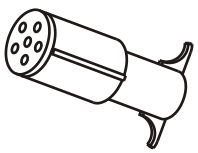

399023 - 7 pole trailer plug only

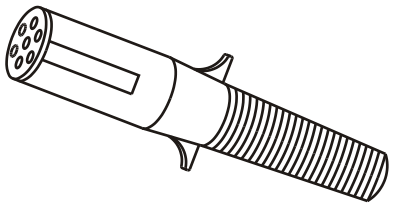

390046 - RV trailer plug only

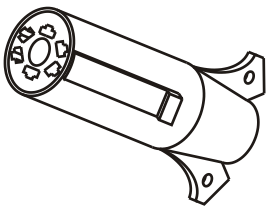

397202 - locking ring (not shown)

Wiring Circuits

Note: Locate wires by function only. Color coding is not standard among all manufacturers.

6 Pole || 7 Pole
USA HARNESS Electric Brakes Only

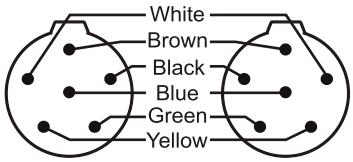

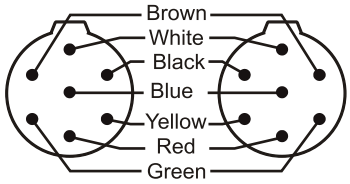

Trailer Plug p/n 39-5005	*Truck Receptacle p/n 39-5006*
white	ground
brown	tail lights
black	accessory
blue	brakes
green	right turn
yellow	left turn

Truck Receptacle p/n 39-9025	*Trailer Plug p/n 39-9023*
brown	tail, clearance, side marker and license plate lights
white	ground
blue	accessory
black	electric brakes
yellow	left turn
red	stop lights
green	right turn

NOTE: The contacts are identified by looking into the open end of either the truck receptacle or trailer plug. 6 & 7 pole. **451407**

7-Pole RV Connector

Vehicle End
P/N 39-0045

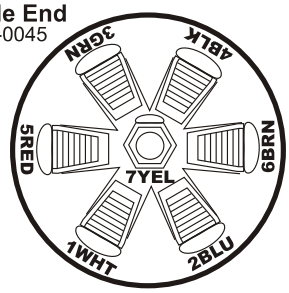

Trailer End
P/N 39-0044

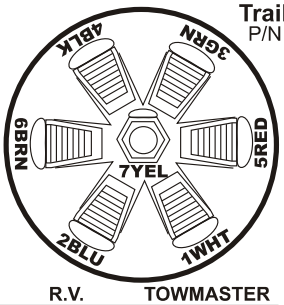

	R.V.	TOWMASTER
1. GROUND	WHITE	WHITE
2. ELECTRIC BRAKES	BLUE	BLUE
3. TAIL, RUNNING LIGHTS	GREEN	BROWN
4. BATTERY	BLACK	
5. L.H. STOP & TURN	RED	YELLOW
6. R.H. STOP & TURN	BROWN	GREEN
7. AUXILIARY	YELLOW	BLACK

45-3308

AIR BRAKE SYSTEM WIRING
4 OR 5 WIRE SCHEMATIC

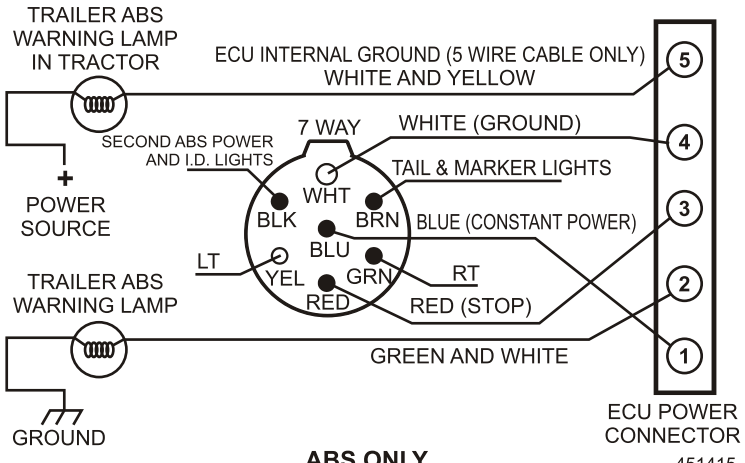

ABS ONLY

451415

Deck Latching System

For Models: B-1.75T, B-2.5T, B-2.5TSL

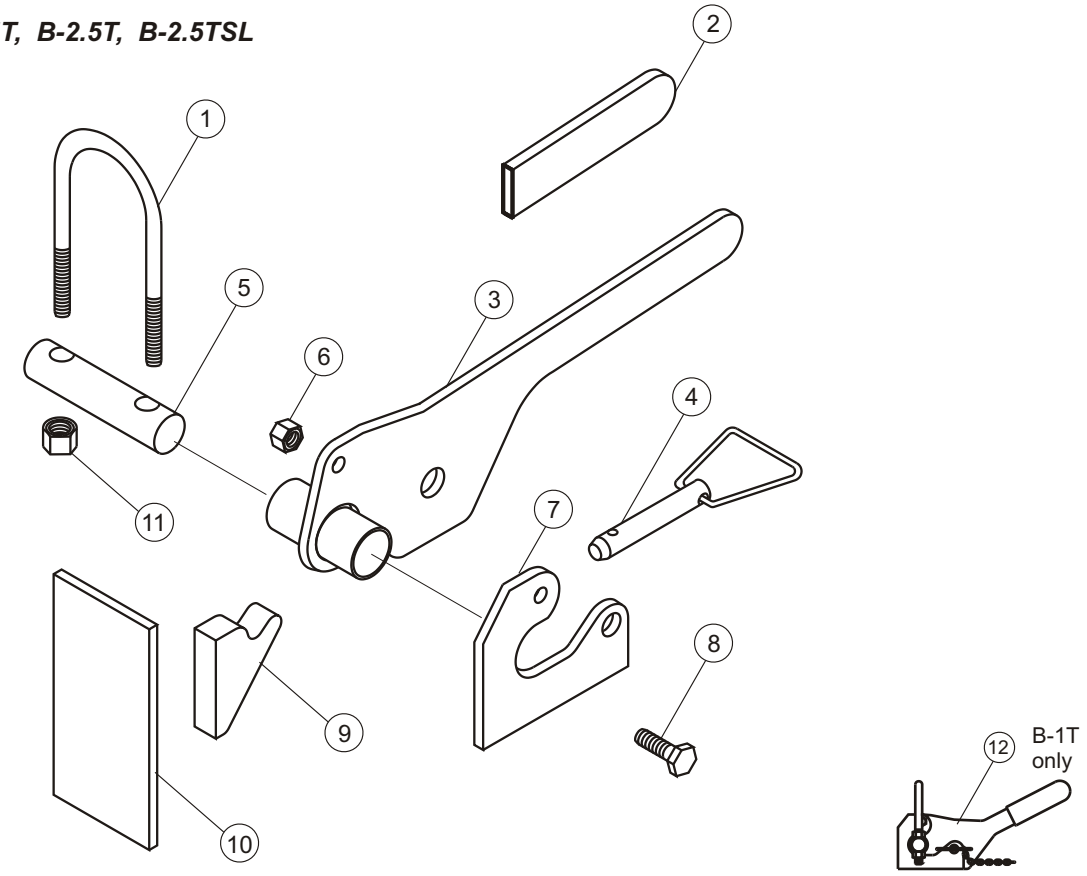

Item	Part #	Description
	16-0004	complete latch assembly, less hook and bar
1	36-0305	u-bolt
2	37-0232	handle grip
3	12-0066	latch handle
4	37-0230	pin w/ chain
5	07-0024	swivel rod
6	36-0002	3/8" ny-lock nut
7	06-0216	latch mount (quantity 2/assembly)
8	36-0004	3/8" x 1 1/4", gr. 5 bolt
9	06-0236	latch hook
10	05-0140	bangboard bar
11	36-0021	1/2" ny-lock nut (fine thread)
12	16-0005	complete latch assembly, less hook and bar, slanted handle (B-1T)

Deck Latching System

Used on these models: B-5T, B-6T, B-7T

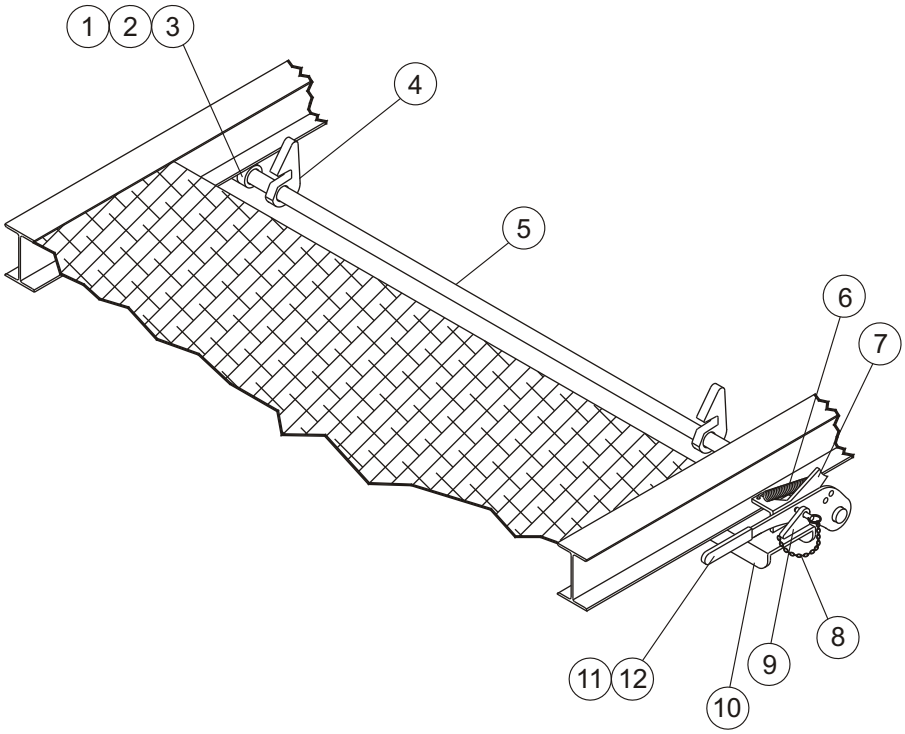

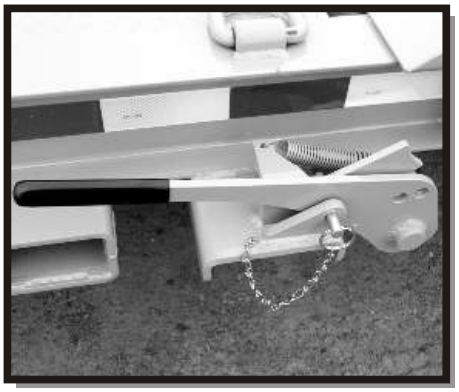

Item	Part #	Description
1	05-0476	spacer bar, welded to bottom of main frame
2	08-0012	collar, long, welded to spacer bar (bottom of frame) one each side
3	08-0002	collar, short, welded to shaft, one each side
4	06-1058	hook, one each side
5	07-0053	shaft
6	37-0535	spring
7	06-1796	locking plate
8	37-0230	pin with chain
9	06-0993	outer pin mount
10	06-1029	latch mounting plate, weld to bottom of frame
11	06-6420	latch handle
12	37-0232	handle grip

⚠ WARNING

TILT DECK

When releasing deck locking lever, stay clear of deck area when loading & unloading. When deck is in down position, make sure safety pin for deck locking lever is in lock position.

Failure to unhook platform latch prior to unloading equipment will cause trailer damage, and may cause bodily injury or death.

450269

Deck Cushion Cylinder and Pivot Pins

Used on these models: B-5T, B-6T, B-7T

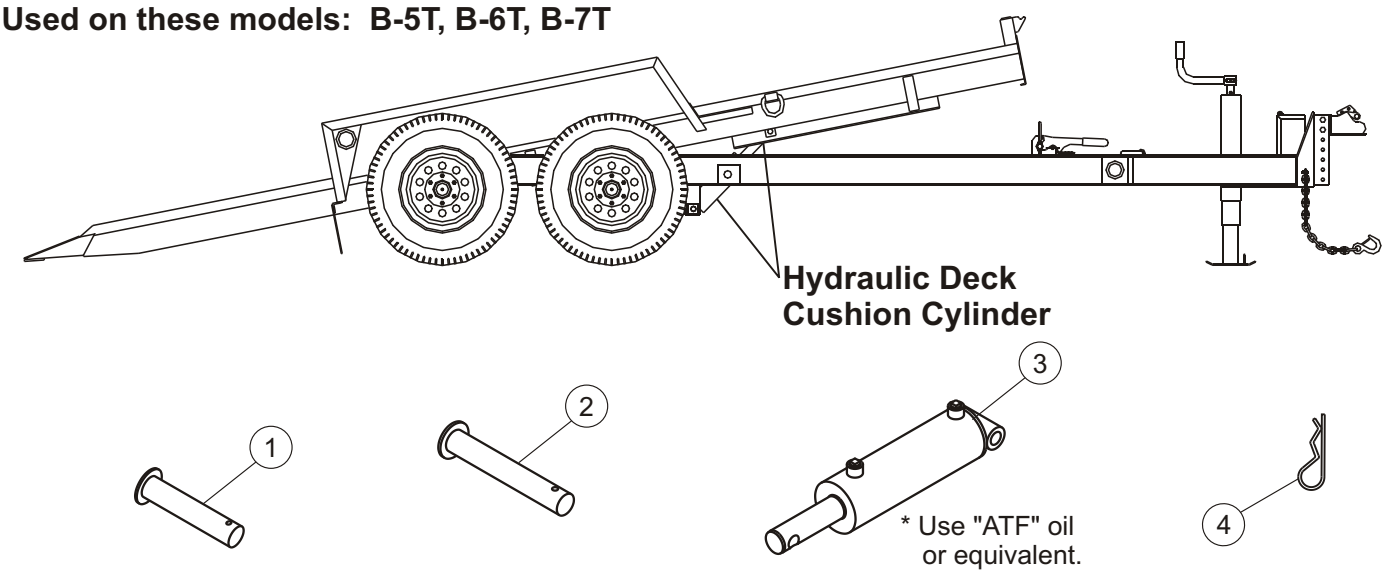

Item	Part #	Description
1	12-0101	cylinder pin, 4"
2	12-0102	cylinder pin, 6 1/2"
3	37-0300	cushion cylinder, 3 1/2 x 8
4	37-0020	lynch pin
	37-0266	seal kit

Pivot Pins

Used on these models: B-5T, B-6T, B-7T

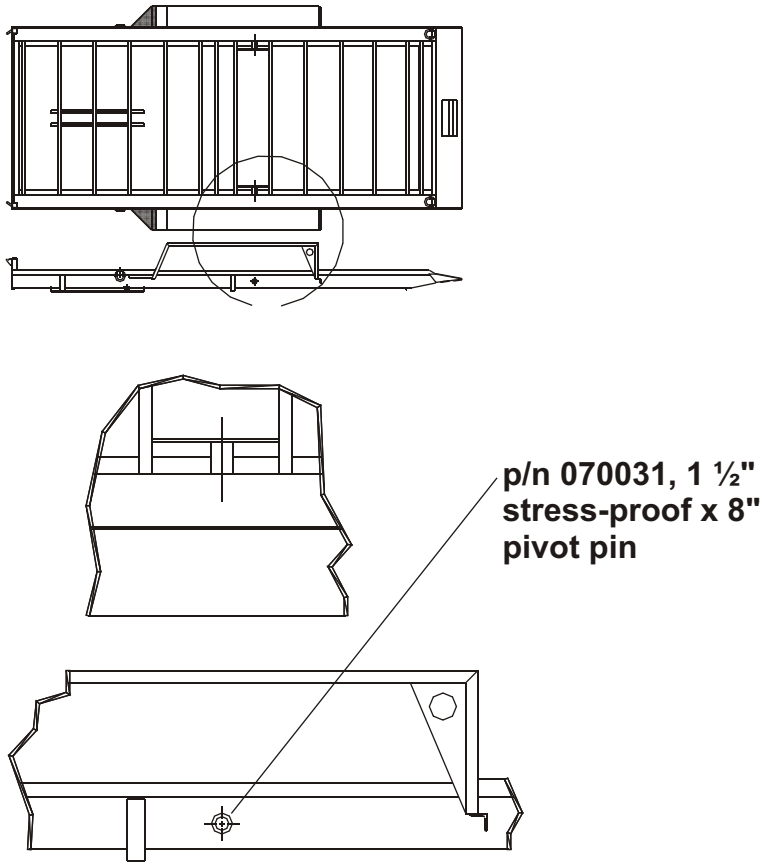

Deck Cushion Cylinder

Used on these models: B-1.75T, B-2.5T

B-1.75T

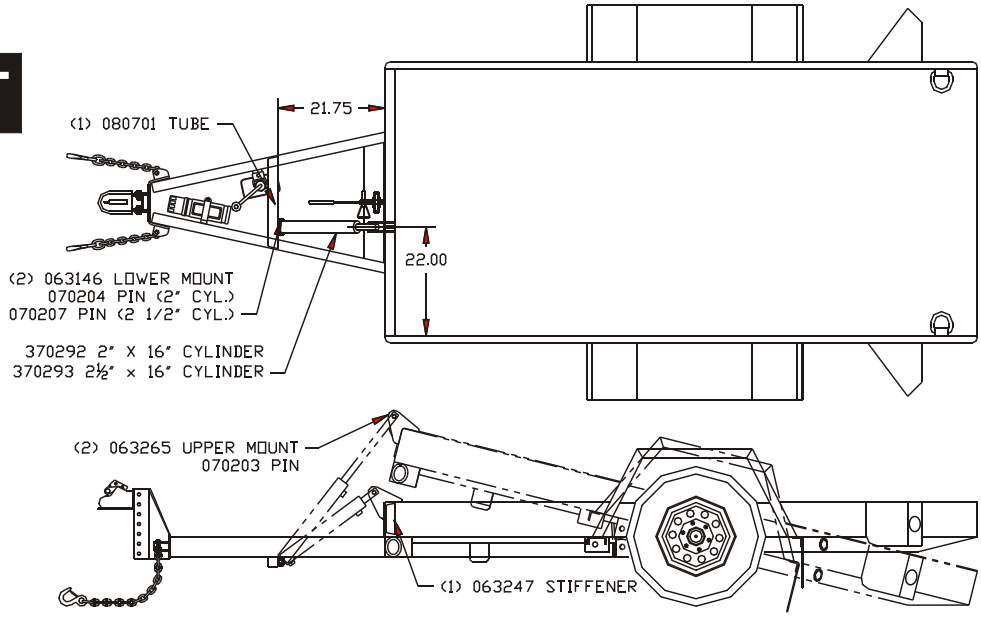

B-2.5T

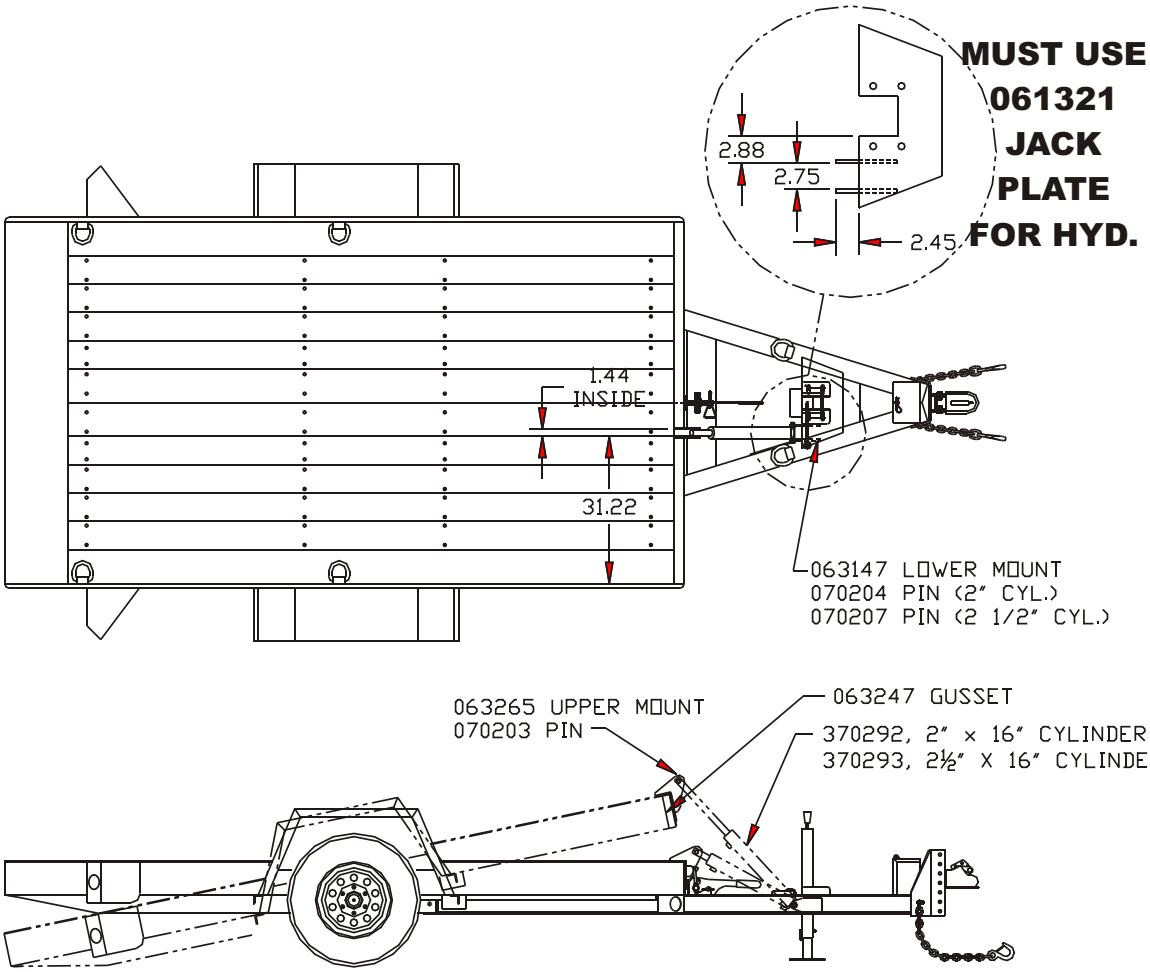

Ramp Rods, Springs, Mounts and Auto-Latch

Item	Part #	Description
1	05-0608	ramp hold-up bar, 38" long
2	37-0234	roll pin, 5/16" x 1 1/2"
	37-0235	roll pin, 5/16" x 3"
4	16-0070	ramp rod, 1" x 38 ½" (07-0037)
4A	16-0073	ramp rod, full width, 1" x 79" (07-0013) pan trailers
4B	16-0072	ramp rod, full width, 1" x 83 ½" (07-0213) DD
4C	16-0024	stress proof ramp rod, 1 1/2" x 33 ½" (07-0018) large DD
4D	16-0027	stress proof ramp rod, 1 1/2" x 29 ½" (07-0042) large DD
7	37-0545	ramp helper spring, 3/8" for 1" ramp rod, B-5P
8	37-0560	ramp helper spring, 3/8" for 1" ramp rod, l.h. only
	37-0561	ramp helper spring, 3/8" for 1" ramp rod, r.h. Only
9	37-0590	ramp helper spring, 3/8" for 1 ½"ramp rod (large DDB's)
10A	37-0622	ramp helper spring, 5/8" for 1" ramp rod, full width ramp (small DD models)
11	37-0592	ramp helper spring, 5/8" for 1 ½"ramp rod (large DD's w/o beavertail)
12	37-0560	ramp helper spring, 3/8" for 1" ramp rod, l.h. (new style small DD)
12A	37-0561	ramp helper spring, 3/8" for 1" ramp rod, r.h. (new style small DD)
13	06-2611	latch handle mount, auto-latch, BE-5, B-5 (specify l.h. or r.h.)
	06-3118	latch handle mount, BE-5BL, BE-6BL models (specify l.h. or r.h.)
	06-1918	latch handle mount, B-5LS, B-6LS only (specify l.h. or r.h.)
14	06-1384	latch handle (all Auto-Latch® models)
15	37-0535	latch handle return spring
32	12-1591	replacement auto-latch pin with washer (1" x 4 1/2")
33	12-1595	replacement auto-latch pin with washer and gusset, r.h. (1" x 5 3/4")
34	12-1598	replacement auto-latch pin with washer and gusset, l.h. (1" x 5 3/4")
35	06-1151	replacement ramp ear, large DD's, 6"
36	06-1749	replacement ramp ear, 9.58", for 3" channel
37	06-0083	replacement ramp ear, 6"
38	06-2573	replacement ramp ear, 8"
39	06-0085	replacement ramp ear, 4",
40	06-1748	replacement ramp ear, 9 1/2"
41	06-3488	replacement ramp ear, 9.58", for 4" channel

Ramp Rods, Springs, Mounts and Auto-Latch

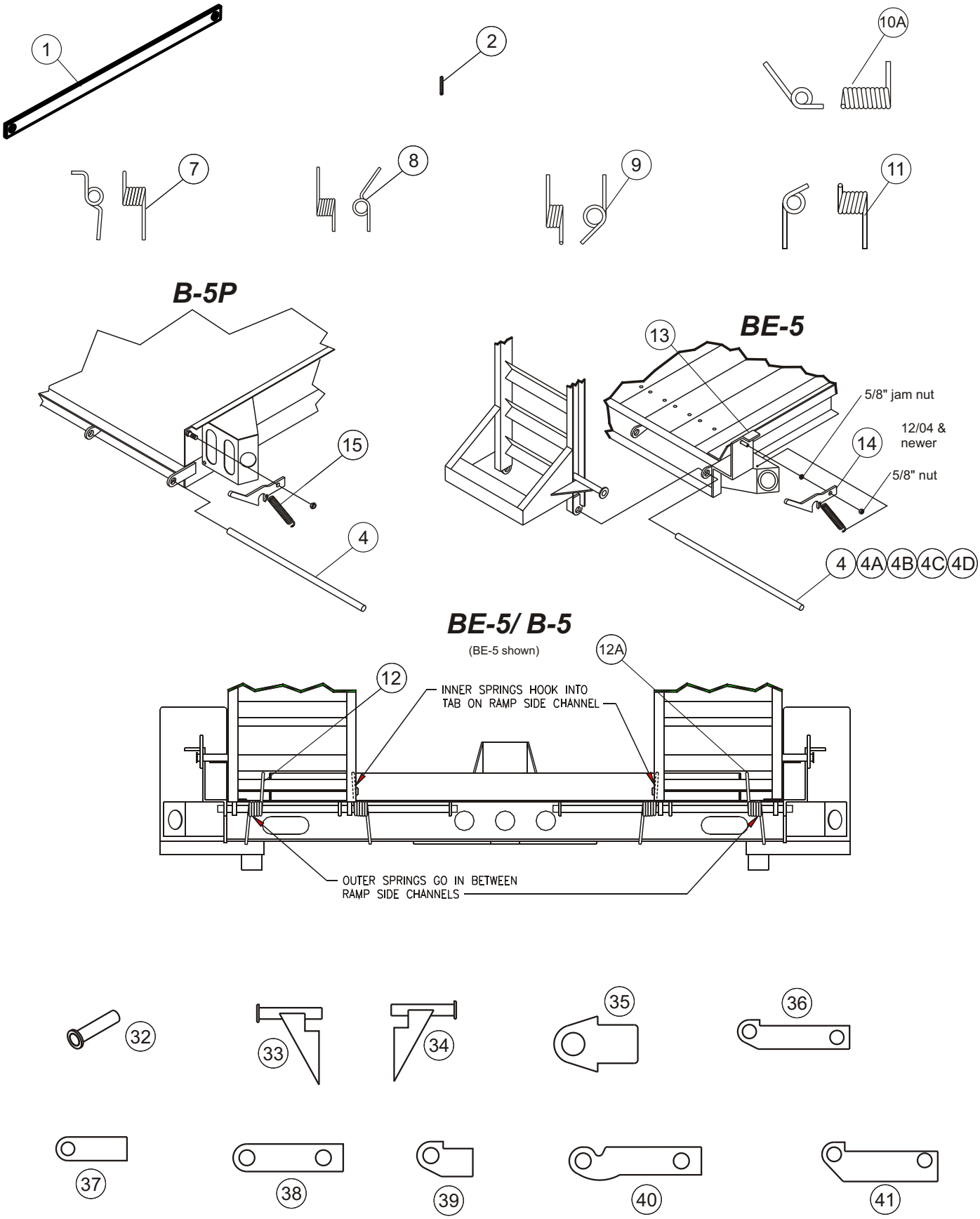

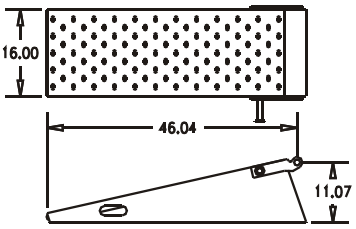

161750 L.H.
161751 R.H. (shown)
B-5P, 4 ft. punch top,
auto-latch (121450)

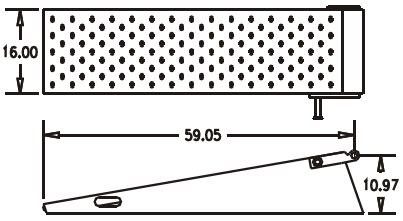

161930 L.H.
161931 R.H. (shown)
B-5P, 5 ft. punch top,
auto-latch (121452)

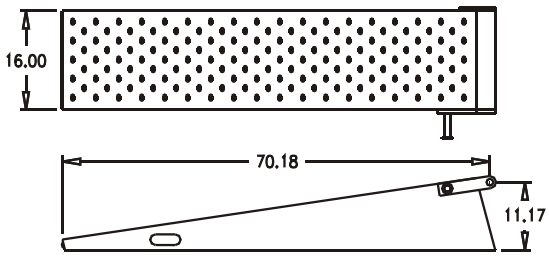

161940 L.H.
161941 R.H. (shown)
B-5P, 6 ft. punch top
auto-latch (121453)

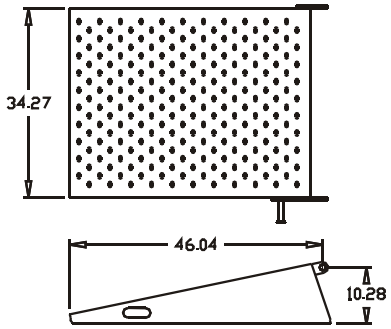

161910 L.H.
161911 R.H. (shown)
B-5P, 4 ft. punch top, full width,
auto-latch (122100)

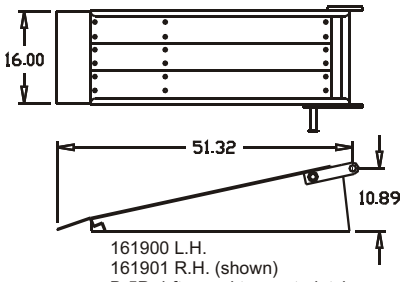

161900 L.H.
161901 R.H. (shown)
B-5P, 4 ft. wood top, auto-latch
(121265)

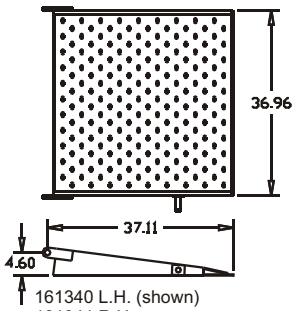

161340 L.H. (shown)
161341 R.H.
B-2.5TSL, full width
f.b. hold-up, punch top (123817)

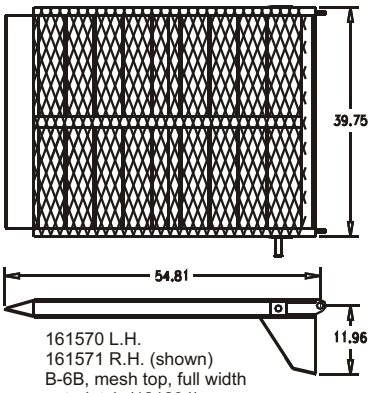

161570 L.H.
161571 R.H. (shown)
B-6B, mesh top, full width
auto-latch (121204)

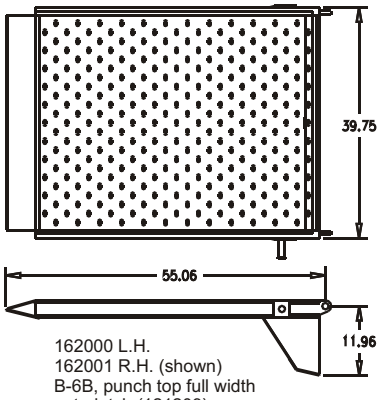

162000 L.H.
162001 R.H. (shown)
B-6B, punch top full width
auto-latch (121203)

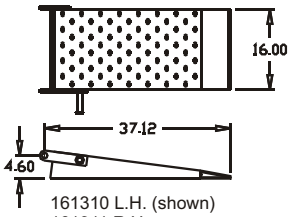

161310 L.H. (shown)
161311 R.H.
B-2.5TSL, B-5TSL punch top
auto-latch (124129)

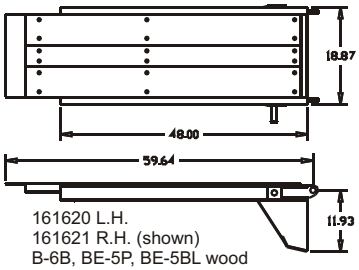

161620 L.H.
161621 R.H. (shown)
B-6B, BE-5P, BE-5BL wood
top, auto-latch (121200)

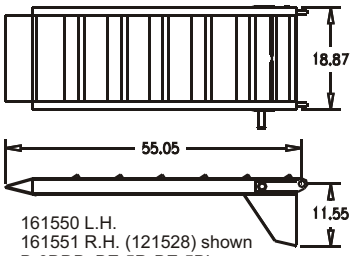

161550 L.H.
161551 R.H. (121528) shown
B-6DDB, BE-5P, BE-5BL
cleat style, auto-latch

Ramps

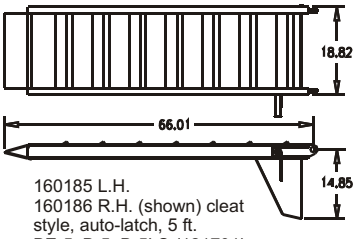

160185 L.H.
160186 R.H. (shown) cleat style, auto-latch, 5 ft.
BE-5, B-5, B-5LS (121701)

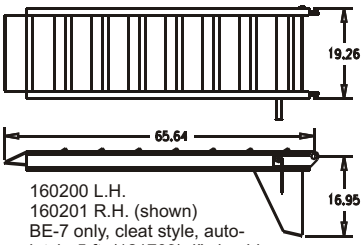

160200 L.H.
160201 R.H. (shown)
BE-7 only, cleat style, auto-latch, 5 ft. (121703) 4" ch. sides

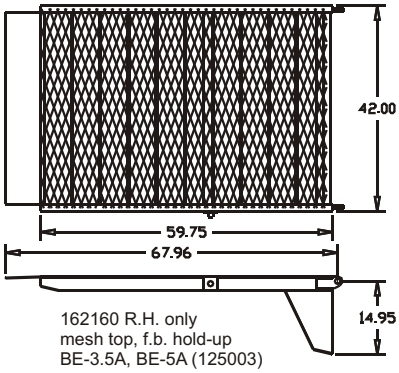

162160 R.H. only
mesh top, f.b. hold-up
BE-3.5A, BE-5A (125003)

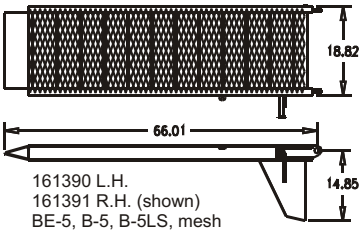

161390 L.H.
161391 R.H. (shown)
BE-5, B-5, B-5LS, mesh top, auto-latch (121707)

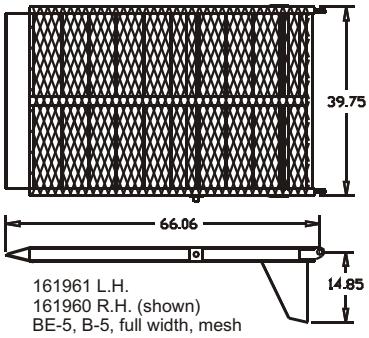

161961 L.H.
161960 R.H. (shown)
BE-5, B-5, full width, mesh top, f.b. hold-up (121704)

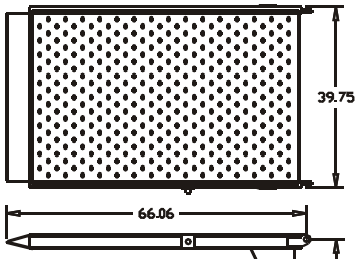

161351 L.H.
161350 R.H. (shown)
BE-5, B-5 punch top, full width, f.b. hold-up (121706)

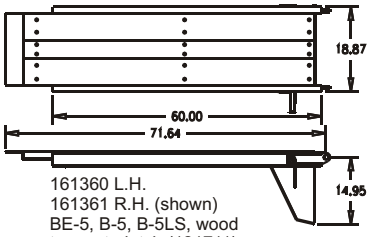

161360 L.H.
161361 R.H. (shown)
BE-5, B-5, B-5LS, wood top, auto-latch (121711)

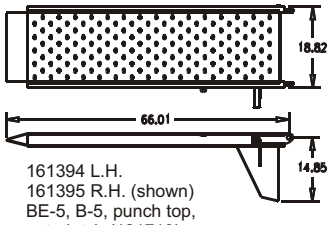

161394 L.H.
161395 R.H. (shown)
BE-5, B-5, punch top, auto-latch (121713)

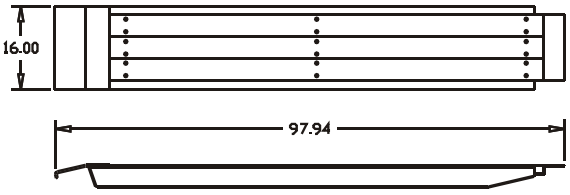

160108 SIDE RAMP, B-8PRS, B-9PRS (121038)

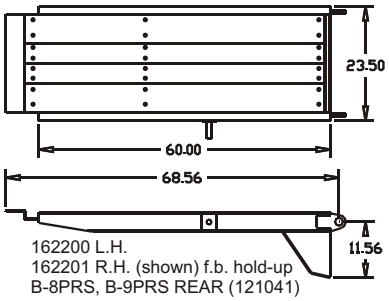

162200 L.H.
162201 R.H. (shown) f.b. hold-up
B-8PRS, B-9PRS REAR (121041)

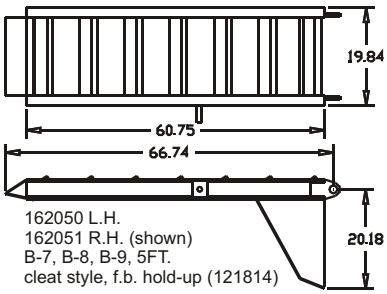

162050 L.H.
162051 R.H. (shown)
B-7, B-8, B-9, 5FT.
cleat style, f.b. hold-up (121814)

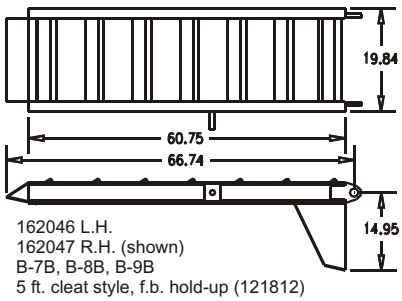

162046 L.H.
162047 R.H. (shown)
B-7B, B-8B, B-9B
5 ft. cleat style, f.b. hold-up (121812)

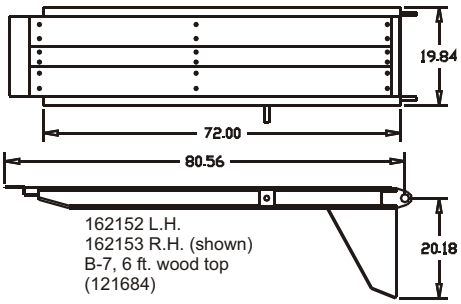

162152 L.H.
162153 R.H. (shown)
B-7, 6 ft. wood top
(121684)

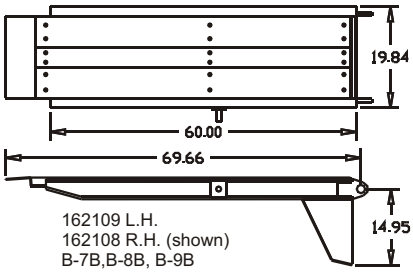

162109 L.H.
162108 R.H. (shown)
B-7B,B-8B, B-9B
5 ft. wood top, f.b. hold-up (121676)

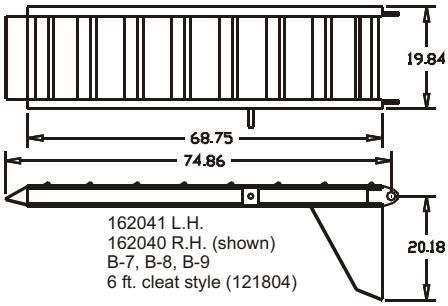

162041 L.H.
162040 R.H. (shown)
B-7, B-8, B-9
6 ft. cleat style (121804)

Due to the several different styles & dimensions of fenders in use, we must have the following dimensions and information when replacement fenders are ordered.

* Dim. A - Length-bottom?
* Dim. B - Length-top?
* Dim. C - Height?
* Dim. D - Width?
* Dim. E - Inner panel height?
* Model and year of trailer?
* Does it have light hole(s) in fender?

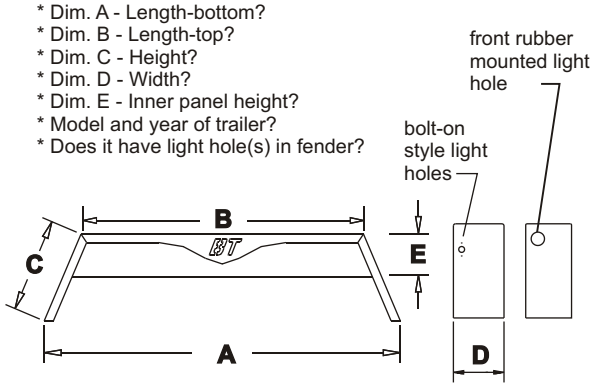

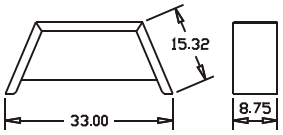

p/n 060513, BE-1T

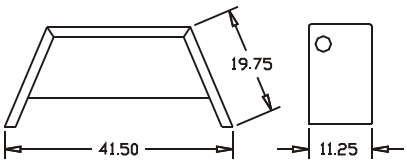

p/n 062276RH, 062276LH B-1.75T, B-3.5T

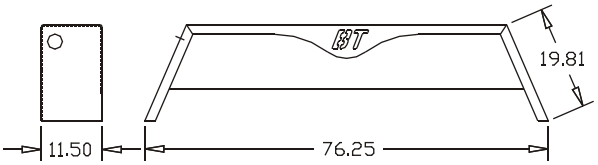

P/n RH 063790, LH 063791

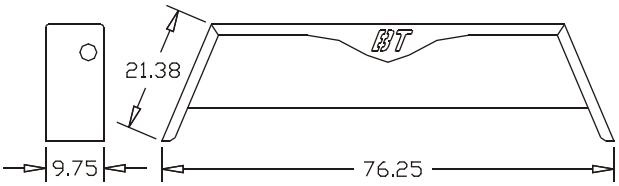

P/n RH 063830, LH 063831, BE-3.5, BE-5, BE-6, BE-5BL, BE-6BL, B-5DD, B-6DD, BE-7

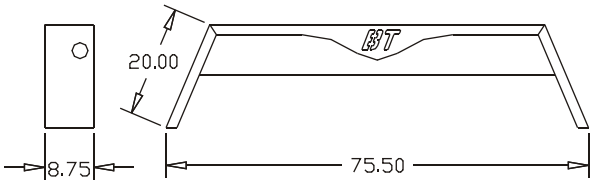

P/n RH 063290, LH 063291 B-7, B7B

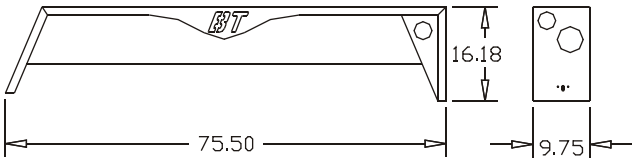

P/n LH120750 l.h. (shown) RH 120752., B-5T, B-6T, B-7T

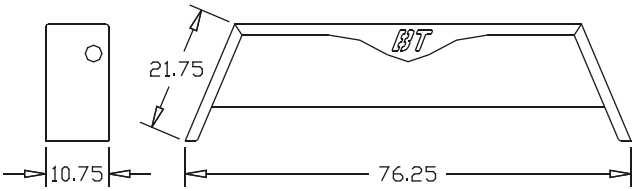

P/n RH 062798, LH 062797 BE-5P spring axle only

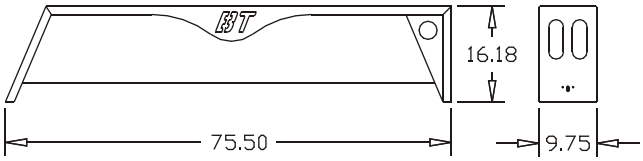

P/n LH 120834 (shown) RH 120835, B-5T, B-6T, B-7T

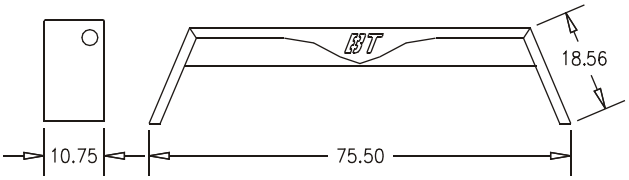

P/n RH 064532, LH 064533,B-9DDB, low pro., 80” deck

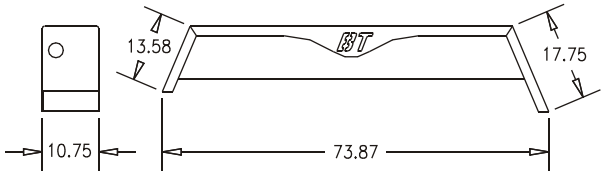

P/n RH 063438, LH 063439, B-8PRS, B-9PRS, 80” deck

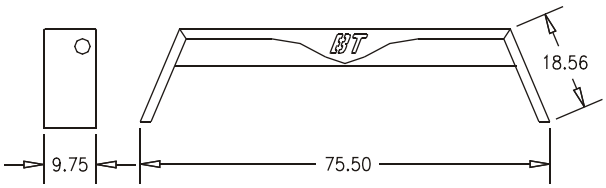

P/n RH 064530, LH 064531, B-8, B-8B, B-9, B-9B low pro. 82" deck

Fenders and Light Boxes

120347B r.h.(shown)
120347A l.h., B-1.75T, B-2.5T
B-3.5P, B-5P

120263 r.h. (shown)
120262 l.h., B-7

120255B r.h. (shown)
120255A l.h., B-8
74" frame, 82" wide deck

120372B r.h. (shown)
120372A l.h. B-9 (no bvt)

120257B r.h. (shown)
120257A l.h., B-8B
74" frame, 82" wide deck

120823B r.h. (shown)
120823A l.h., B-9PRS
69" frame, 80" wide deck

120831B r.h. (shown)
120831A l.h., B-9PRS
69" frame, 82" wide deck

123952B r.h. (shown)
123952A l.h., BE-5BL, BE-6BL

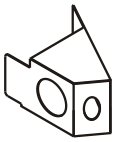

120762B r.h. (shown)
120762A l.h., B-6B

120285B r.h. (shown)
120285A l.h., B-7

120331B r.h. (shown)
120331A l.h., B-8
74" frame, 82" wide deck

120285B, r.h. (shown)
120285A, l.h., B-7

120331B, r.h. (shown)
120331A, l.h., B-8
74" frame, 82" wide deck

120251B r.h. (shown)
120251A l.h., B-7B

120524B r.h. (shown)
120524A l.h., B-6B

120526B r.h. (shown)
120526A l.h., B-9B

120822B r.h. (shown)
120822A l.h., B-8PRS
74" frame, 80" wide deck

120474B r.h. (shown)
120474A l.h., B-9B
69" frame, 82" wide deck

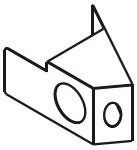

120764B r.h. (shown)
120764A l.h., B-9B
69" frame, 80" wide deck

120770B r.h. (shown)
120770A l.h., B-7B

120766B r.h. (shown)
120766A l.h., B-8B
74" frame, 82" wide deck

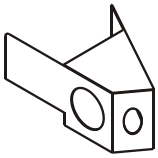

120759B r.h.(shown)
120759A l.h., B-8PRS, B-9PRS
69" frame, 80" wide deck

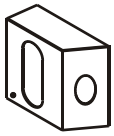

120476B r.h. (shown)
120476A l.h., BE-5P

061953, side/front light bracket, for 6" beam

060883, front marker light bracket, B-1T, BE-5P

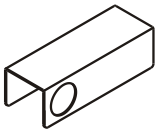

062956, B-5T, B-6T, B-7T, specify l.h. or r.h. side light bracket

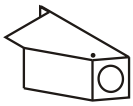

120760B, r.h. (shown)
120760A, l.h., BE-5,B-5
marker light

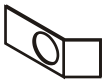

060482, side/front light bracket, B-1.75T, B-2.5T

060446, side/front light bracket, for 10" beam

062032, side/front light bracket, for 10" beam
2 bends

060880, rear light bracket, old style, BE-5P

060881, rear light bracket with square hole, B-1T, specify l.h. or r.h.

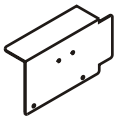

060876, rear light bracket, specify l.h. or r.h.

Miscellaneous Parts

370003, 3/8" x 40", gr. 43 safety chain, 12,000 lb. capacity & smaller
370014, 3/8" x 40", gr. 70 safety chain, 14,000 lb. - 20,000 lb. capacity
370002, ½"x 40", gr. 70 safety chain, 24,000 lb. - 30,000 lb. capacity
370013, ½"x 40", gr. 80 safety chain, 40,000 lb. capacity models
370006, 5/8" x 40", gr. 80 safety chain, 50,000 lb. capacity models

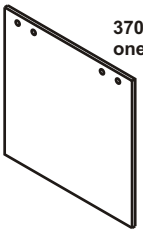

370812, mud flaps, generic, one pair, 10" x 10"

061379
"BE-5" tie down

370008, 3/4" D-ring with clip

370009, 1" D-ring with clip
(370011 D-ring only)

050221, stake pocket, 1 ½ x 3 ½ stakes, 4" deep, 1/4" matl, see 050222 for 3/16" matl

123995, stake pocket, BE-5

050482, stake pocket, BE-1T

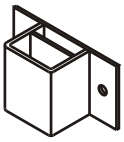

123998, stake pocket, bolt-on for B-5P sides

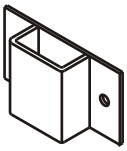

123999, stake pocket, bolt-on for B-5P headboard

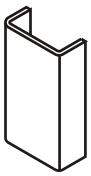

060900, stake pocket, 7" BE-5P

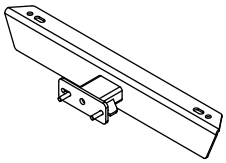

120246 spare tire mount, B-5T
120247 spare tire mount, B-6T
120248 spare tire mount, B-7T

120253, spare tire mount, BE-3.5, BE-5
6 bolt (replaces 060704)

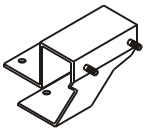

123807, BE-3.5, BE-5
8 bolt

160205 spare tire mount,
B-5P, 6 bolt (ref. 060431)

160210 8 bolt (ref. 060429)

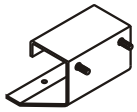

160215, spare tire mount,
6 bolt (ref. 060432) 3 x 2 sides
060385 - 3 x 3 sides

160220, 8 bolt (ref. 060433)

060425 with 235 tires, 6 bolt

124034 spare tire mount
B-7B

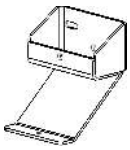

124036, spare tire mount,
BL, bolt on style

124042, spare tire mount,
BE-5, bolt on style

160255, spare tire mount, B-7,
5/8" studs only (ref. 060457)

160235, spare tire mount, B-8
5/8" studs only, (ref. 060481)

123975, tool box hinge

123980, tool box hinge

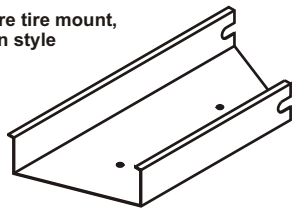

030300, tool box bottom only, BE-5P

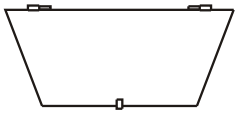

123977, tool box lid, bolt on style, B-3.5P,
B-5P, BE-5P, use with hinge 123975

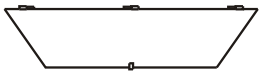

123976, tool box lid, bolt on style, BE-5,
use with hinge 123975

123971, tool box lid, bolt on style, B-5T,
B-6T, B-7T, use with hinge 123975
(pre-8/2/04 use lid 123978)

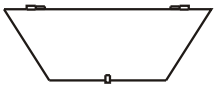

123969, tool box lid, bolt on style,
B-8PRS, B-9PRS, use with hinge 123975

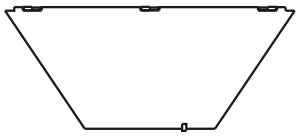

123979, tool box lid, bolt on style, B-7
123982, tool box lid, bolt on style, B-8
123984, tool box lid, bolt on style, B-9B
(all 3, use with hinge 123980)

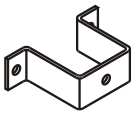

060737, hubodometer mounting
bracket, 6 bolt hubs only

375011, hubodometer

376072, registration holder

* Not shown: 360025, 5/16" x 2 1/4" torque decking screw, 360216 - 3" screw

Bucket Stop

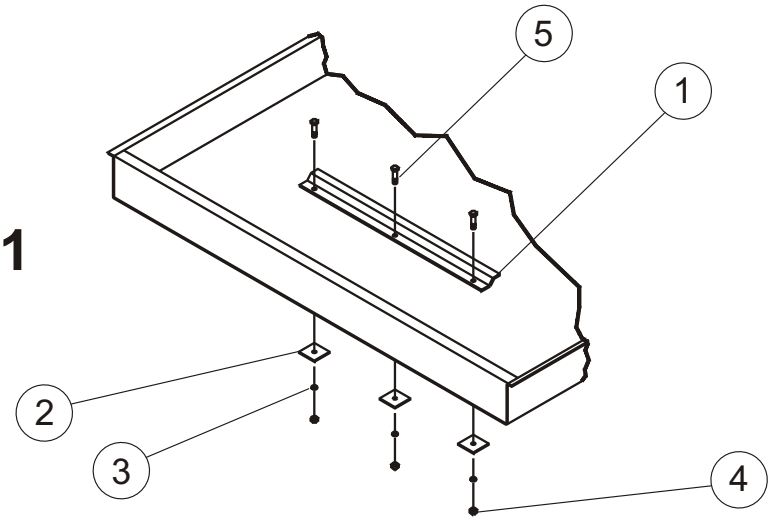

FIG. 1

The bucket stop is designed to keep the weight of a skid steer loader spread evenly on the axles of our 14'-0" or longer utility trailers. 70% of a skid steer's weight is on the rear tires. The skid steer should be loaded where the rear tires are between the axles on the trailer as shown in **FIG. 2.** After loading, mark out the location of the bucket on the deck of the trailer, lay the bucket stop centered on the deck directly in front of the bucket and mark the hole locations. Drill (3) 17/32" dia. holes and bolt bucket stop to deck (**FIG. 1.**)

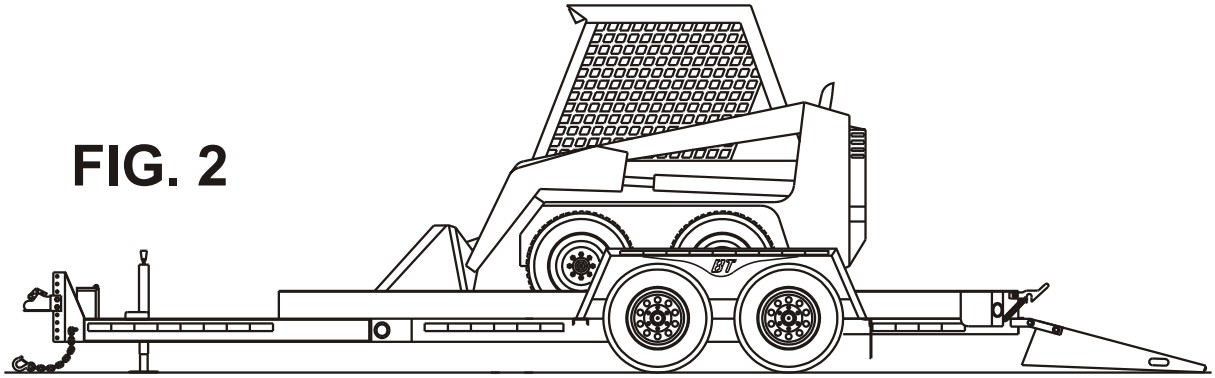

FIG. 2

Item	Part #	Description
	37-1001	bucket stop kit
1	05-0216	bucket stop bar
2	05-0218	bucket stop washer
3	36-0018	1/2" lock washer
4	36-0008	1/2" nut
5	36-0019	1/2" x 1 1/2" bolt

ALL PAYLOAD RATINGS ARE AT 55+ M.P.H. Trailers are NOT shipped with BRAKE CAB CONTROL equipment. Contact our parts department for information on specialized controllers.

All payload ratings are approximate, and will vary slightly with the actual finished trailer weight. Please see detail specifications for exact Gross Vehicle Weight Rating (GVWR). Trailer payload capacity is defined as the GVWR less the actual trailer weight. Please note that this payload capacity is a maximum to not be exceeded, and may only be achieved when the trailer is carefully loaded so that the hitch bears its full rated load.

Payload capacity will be reduced if the trailer is loaded such that the hitch bears less than its full rated loading. Care should be taken that moving the load back to reduce hitch weight does not overload the axles and tires. The certification tag on the trailer tongue lists the Gross Axle Weight Rating (GAWR), which is the maximum total weight allowed on the axles/tires. Total axle/tire weight allowed is the GAWR times the number of axles. The tag also lists the GVWR. The required hitch weight at full load is the difference of the GVWR and the sum of the GAWR's.

Payload capacity will also be reduced by the addition of any options or changes that increase the trailer weight.

When selecting a trailer, always allow a capacity safety margin to account for non-uniform loading, growth in load and accessories weight, and the multitude of other unforeseen circumstances that occur in equipment transportation.

Towing Tips and Check List

Know and follow all state, local, D.O.T., towing and tie down laws that pertain to the load/trailer combination that is to be towed. If you have any questions, contact your local law enforcement or D.O.T. before towing.

OK	NO	
☐	☐	1. Check over-all condition of trailer: tie downs, ramps, hitch for proper operation.
☐	☐	2. Make sure the trailer coupler and towing coupler are the same size and proper capacity.
☐	☐	3. Back tow vehicle up to trailer, and hook up. Using a "spotter" is the easiest method.
☐	☐	4. Trailer must be connected to tow vehicle before loading or unloading.
☐	☐	5. Lock tow vehicle brakes before loading and unloading trailer, and use chock blocks.
☐	☐	6. After connected to tow vehicle, make sure trailer is level, or slightly higher in front, adjust as needed.
☐	☐	7. Attach safety chains (cross them), electrical plug and break-a-way switch (electric brakes), and make sure they are not dragging.
☐	☐	8. Check for proper tire pressure on trailer and tow vehicle.
☐	☐	9. Check all lighting on trailer and tow vehicle for proper operation. Adjust brake controller (electric brakes) as necessary for proper braking. Make sure running lights are on.
☐	☐	10. Make sure deck is clear of all debris before loading and before heading out onto the road.
☐	☐	11. Secure cargo or equipment to trailer, secure load on all 4 corners if possible, do not over-tighten binders.
☐	☐	12. Secure all loading ramps, deck latches (tilt models) and make sure jack stand is in up position, and stow chock blocks.
☐	☐	13. After traveling a short distance, stop and check to see if your load is secure, and that all tie downs are tight.
☐	☐	14. Allow for greater braking distance when pulling a trailer, and generally travel at slower speeds.

This decal, p/n 455108 is located on the left side of your trailer (models B-1T, B-1.75T, B-2.5T, B-5T, B-6T, and B-7T only). This decal says that *after* loading your trailer, the equipment or load being transported shall not be behind this point. Equipment or load being transported on models B-1T and B-1.75T shall be a minimum of 3 feet from rear of deck and a minimum of 4 feet from rear of deck on models B-2.5T, B-5T, B-6T, and B-7T.

Decal p/n 455109 is located on the top of the left fender of your trailer (models B-1T, B-1.75T, B-2.5T, B-5T, B-6T, and B-7T only)

B-1T and B-1.75T

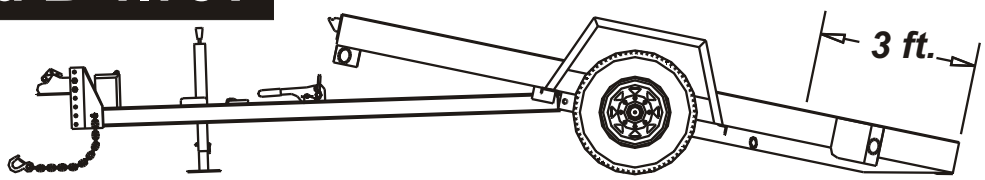

B-2.5T, B-5T, B-6T, and B-7T

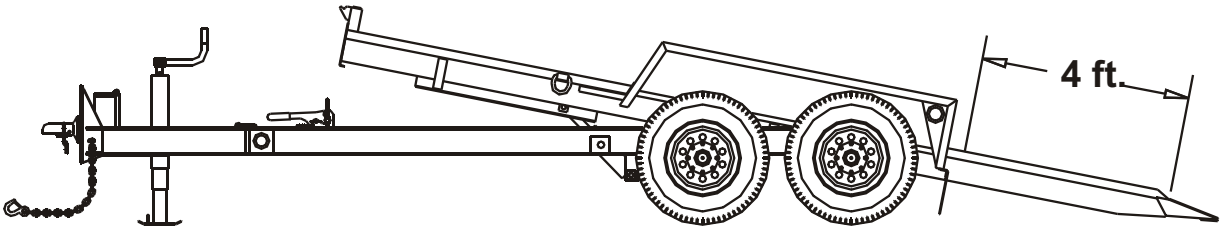

⚠ WARNING

This trailer with ELECTRIC BRAKES requires an electric brake controller in tow vehicle.

Load must be secured according to D.O.T. standards.
(Follow DOT Federal Motor Carrier Safety Regulations §392.9, §393.100 and §393.102.)

Trailer tongue is rated to transfer 20-25% of gross weight to achieve maximum payload capacity and proper towing. Check hitch bolts frequently. Use only grade 8 bolts and nuts on hitch.

KEEP THEM TIGHT!

Trailer must be towed level, or slightly higher (1" to 2") in front.

453220B

⚠ WARNING

This trailer with HYDRAULIC SURGE BRAKES may not comply with all Federal D.O.T. requirements.

Load must be secured according to D.O.T. standards.
(Follow DOT Federal Motor Carrier Safety Regulations §392.9, §393.100 and §393.102.)

Trailer tongue is rated to transfer 20-25% of gross weight to achieve maximum payload capacity and proper towing. Check hitch bolts frequently. Use only grade 8 bolts and nuts on hitch.

KEEP THEM TIGHT!

Trailer must be towed level, or slightly higher (1" to 2") in front.

453220A

⚠ WARNING

TILT DECK

When releasing deck locking lever, stay clear of deck area when loading & unloading. When deck is in down position, make sure safety pin for deck locking lever is in lock position.

Failure to unhook platform latch prior to unloading equipment will cause trailer damage, and may cause bodily injury or death.

450269

⚠ WARNING

For proper performance, all new axles should have the following checked at the specific intervals:

Wheel Nut Torque:

Upon delivery, at 10, 25 and 50 miles and weekly thereafter. KEEP THEM TIGHT!

Brake Adjustment:

At 200 miles and 3,000 miles and every 3,000 miles thereafter.

Tire Pressure:

Upon delivery and per tire manufacturer's requirements.

450009A

⚠ WARNING

OVERLOAD HAZARD

Risk of death due to loss of control

Never exceed gross vehicle weight rating (GVWR)

BEFORE LOADING TRAILER THE FIRST TIME, YOU MUST VERIFY ITS CARGO CAPACITY

1. You must weigh the empty trailer
2. subtract the weight of the empty trailer from the maximum loaded trailer weight (GVWR) (see VIN/Serial No. Tag)
3. DO NOT LOAD TRAILER BEYOND CAPACITY

MAXIMUM CARGO WEIGHT
+ PLUS
WEIGHT OF EMPTY TRAILER = (GVWR)

453323

p/n: 452820

DANGER

SERIOUS INJURY AND/OR PROPERTY DAMAGE CAN RESULT IF THIS VEHICLE IS TOWED BEFORE FAMILIARIZING YOURSELF WITH THE MANUFACTURER'S OPERATING INSTRUCTIONS AND CAUTIONS LISTED TO THE RIGHT

CAUTION BEFORE TOWING THIS TRAILER CHECK THAT:

- COUPLER HITCH AND TRAILER BALL ARE THE SAME SIZE
- COUPLER IS LATCHED
- SAFETY CHAINS ARE CRISSCROSSED UNDER TONGUE AND ATTACHED TO TOW VEHICLE
- ALL TRAILER LIGHTING IS WORKING CORRECTLY
- LOAD IS SECURED TO TRAILER FRONT AND REAR
- TONGUE JACK (IF SO EQUIPPED) IS RETRACTED
- TILT PIN IS LATCHED
- WHEEL LUG BOLTS ARE PROPERLY TIGHTENED
- TIRES ARE INFLATED TO PRESSURE INDICATED ON TIRE
- TRAILER BRAKES ARE PROPERLY ADJUSTED AND BREAK-AWAY DEVICE IS ATTACHED TO TOW VEHICLE
- LOAD IS WITHIN TRAILER CAPACITY AND DISTRIBUTED PROPERLY TO MAINTAIN PROPER TONGUE WEIGHT

WARNING

YOU ARE REQUIRED TO COMPLY WITH LOCAL AND STATE REQUIREMENTS REGARDING BRAKES, LICENSING AND AN ADDITIONAL EQUIPMENT THAT MAY BE NECESSARY. CONTACT YOUR STATE MOTOR VEHICLE DEPARTMENT FOR MORE INFORMATION. ALSO REFER TO DOT FEDERAL MOTOR CARRIER SAFETY REGULATIONS §392.9, §393.100 AND §393.102. 452820

CAUTION

KEEP BATTERY CHARGED!

To ensure proper break-away protection, check battery regularly for proper charge.

450280

p/n: 450005

p/n: 450004

p/n: 450014

DEXTER AXLE

This trailer equipped with

E-Z Lube

Use only **LITHIUM COMPLEX** NLGI CONSISTENCY #2 GREASE
Other types of grease may not be compatible.
These hubs and bearing have been lubricated at the factory. The bearings can ve periodically lubericated without removing hubs. Simply remove the rubber plug, attach a grease gun to the grease fitting, apply grease until new grease come out around the slotted spindle nut. Wipe off any excess and reinstall the rubber plug.

CAUTION

Pallet forks must be secured to trailer while trailer is in motion.

450305

CAUTION

BREAK-AWAY SWITCH IS FOR EMERGENCY USE ONLY!

To check:
1. Attach trailer to tow vehicle coupler
***Do NOT connect wiring recepticle to tow vehicle**
2. Remove break-away plug from switch box.
3. Pull trailer forward slightly (looking for trailer brakes to be locked)
4. Promptly replace plug into switch box.
5. Attach break-away cable to tow vehicle for transport

Do not remove break-away plug from switch box for use as a parking brake or while wiring recepticle is pluged into tow vehicle (severe wiring damage may be

450291

p/n: 450008

p/n: 450052 - 1" red/white reflectorized tape

p/n: 450050 - 2" red/white reflectorized tape

P/n: 450036A- 1”x 6”, 450037A- 5”x 26”

Big Tow TRAILERS

p/n: 455000

866-397-8481
bigtowtrailers.com

p/n: 453227

p/n: 458206

⚠ WARNING

For hitch extension only!

DO NOT use for hitch height adjustment.

Use all mounting bolts to mount to hitch plate.

458206

⚠ DANGER

Ball Coupler Operation

Closed position must be used whenever trailer is attached to tow vehicle.

La posición cerrada debe ser utilizada siempre que el acoplado se una al vehículo del remolque.

CLOSED POSITION
Posición Cerrada

2 5/16" ONLY
Solamente

OPEN POSITION
Posición Abierta

453227

p/n: 451407

6 Pole	7 Pole
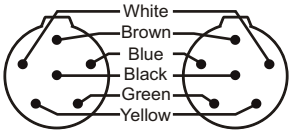	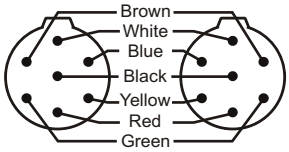

Trailer Plug p/n 39-5005	Truck Receptacle p/n 39-5006
white	ground
brown	tail lights
black	accessory
blue	brakes
green	right turn
yellow	left turn

Truck Receptacle p/n 39-9025	Trailer Plug p/n 39-9023
brown	tail, clearance, side marker and license plate lights
white	ground
black	accessory
blue	electric brakes
yellow	left turn
red	stop lights
green	right turn

NOTE: The contacts are identified by looking into the open end of either the truck receptacle or trailer plug. 6 & 7 pole.

451407

p/n: 452705

ATTENTION:

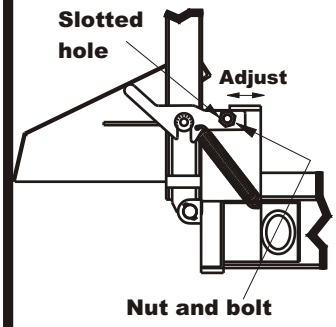

To adjust ramps to stand in the transport position, loosen nut and bolt in slotted hole, move ramp to desired position, and tighten nut and bolt.

452705

p/n: 452925

ATTENTION:

Registration Holder

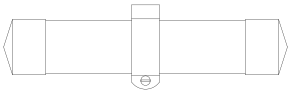

Parts and Service Manual enclosed. To receive an additional 6 months warranty of MAIN FRAME only, return your warranty registration within 14 days. See dealer.

452925

p/n: 451240

ATTENTION

A "green brake" is an unground, unburnished brake. Normal manufacturing tolerances dictate that there is a break-in period required after which the lining will seat into a perfect concentric situation. During this break-in period, the user must be aware that additional brake adjustments will be mandatory to

451240

Decal Kits

For complete decal kits: please specify trailer model, deck length and paint color.

Part number	Model
451749	B-2.5TSL
451750	BE-3.5
451751	BE-5P
451752	BE-5
451754	BE-6
451756	BE-5A
451758	BE-7
451760	BE-5BL
451762	BE-6BL
451650	B-3.5P
451654	B-5P
451670	B-5
451675	B-6
451710	B-7
451691	B-8
451685	B-7B
451695	B-9B
451712	B-8PRS
451713	B-9PRS
451697	B-1T
451698	B-1.75T
451699	B-2.5T
451700	B-5T
451705	B-6T
451710	B-7T
451765	B-5LS
451766	B-6LS

Reporting Safety Defects

Reporting Safety Defects: If you believe that your vehicle has a defect which could cause a crash or could cause injury or death, you should immediately inform the National Highway Traffic Safety Administration (NHTSA) in addition to notifying BigTow, Inc.

If NHTSA receives similar complaints, it may open an investigation, and if it finds that a safety defect exists in a group of vehicles, it may order a recall and remedy campaign. However, NHTSA cannot become involved in individual problems between you, your dealer, or BigTow, Inc.

To contact NHTSA, you may either call the Auto Safety Hotline toll-free at 1-800-424-9393 (or 366-0123 in Washington, DC area) or write to: NHTSA, U.S. Department of Transportation, 400 7th Street SW NSA-11, Washington, DC 20590. You may also obtain other information about motor vehicle safety from the Hotline.

Maintenance and Operating Instructions

TIRES: Check daily, and maintain proper inflation. Refer to Tire Chart.

WHEEL NUTS: Check weekly, and maintain proper torque.

WHEEL BEARINGS: Check bearings every 3000 miles. Grease if necessary. Check for overheating and excessive wear when operating in severe conditions, i.e. deep mud, sand or water and also when a hub is pulled for any reason.

WHEEL BEARINGS/LUBRICATION: Check oil level of wheel bearings daily. Where severe operating conditions such as deep mud, sand, or water, etc. are encountered, bearings should be checked for over-heating or excessive wear and also when a hub is pulled for any reason. Fill hub with SAE 90 oil to indicated level on hub cap.

BATTERY: Keep battery charged! To ensure proper break-a-way protection, check battery regularly for proper charge.

ELECTRICAL PLUG: Check trailer plug and truck receptacle for damage and/or corrosion, and that they fit tight.

LIGHTS/WIRING: Inspect all lights for proper operation daily and replace as necessary. Connect power source, preferably tow vehicle to trailer, and check all lights for proper operation and possible loose connections, or improper wiring between tow vehicle and trailer.

PARKING JACK: Check jack for any physical damage or improper operation due to corrosion. Replace if severely damaged or rusted. Check bolts for tightness daily and be sure the lock washers and/or lock nuts are used.

TIE DOWN RINGS: Check daily for physical damage to "D" ring, clips, or welds and replace or repair immediately.

SUSPENSION BOLTS: After an initial break-in period of 150 miles and periodically thereafter every 1000 miles, all bolts and nuts should be rechecked for proper torque. Check eye bushings in springs for wear and replace any part if wear shows.

DECK CUSHION CYLINDER: Use "ATF" oil or equivalent. (Tilt models only.)

COUPLER/TOW RING: Inspect visually: if coupler shows excessive wear, it should be replaced.

TOW RING: Inspect for tightness daily before use. Ring plate must be tight against hitch plate to prevent plate deformation. If ring shows excessive wear, it should be replaced immediately. Double nut bottom bolts. (4 bolt pintle ring.)

TOW RING INSTALLATION

1. Determine proper tow ring height according to tow vehicle.
2. Install tow ring with secondary support bolt in lower position whenever possible.
3. Tighten nuts on both bolts until lock washers are fully compressed.
4. Do not use tow ring with a hitch which is excessively loose or that binds when trailer turns.
5. Double nut lower bolts.

BRAKE CONTROLLER: Check controller daily for proper operation both automatic with tow vehicle foot pedal and manually. Replace if defective or damaged. Adjust for proper braking effect for load being towed. Trailer braking should be adjusted so that trailer brakes react and apply at the same time as tow vehicle brakes come on, never after tow vehicle brakes.

MAGNETS: Check at any indication of braking problems, at brake replacement, at bearing inspection, or any time a hub is pulled. Magnets should be replaced if bare wire is showing at wear surface, surface of magnet is gouged, scored, or magnet is worn unevenly.

BRAKE CLEANING/INSPECTION: Your trailer brakes must be inspected and serviced at yearly intervals or more often as use and performance requires. Magnets and shoes must be changed when they become worn or scored thereby preventing adequate vehicle braking. Clean the backing plate, magnet arm, magnet, and brake shoes. Make certain that all the parts removed are replaced in the same brake and drum assembly. Inspect the magnet arm for any loose or worn parts. Check shoe return springs, hold down springs, and adjuster springs for stretch or deformation and replace if required. **ASBESTOS DUST HAZARD!** Since some brake shoe friction materials contain asbestos, certain precautions need to be taken when servicing brakes: (1) Avoid creating or breathing dust. (2) Avoid machining, filing or grinding the brake linings. (3) Do not use compressed air or dry brushing for cleaning. (Dust can be removed with a damp brush.)

BRAKE ADJUSTMENT: Brakes should be adjusted (1) after the first 200 miles of operation when the brake shoes and drums have "seated," (2) at 3000 mile intervals, (3) or as use and performance requires. The brakes should be adjusted in the following manner:

1. Jack up trailer and secure on adequate capacity jack stands. Do not lift or place supports on any part of the suspension system. Check that the wheel and drum rotate freely.
2. Remove the adjusting hole cover from the adjusting slot on the bottom of the brake backing plate.
3. With a screwdriver or standard adjusting tool, rotate the starwheel of the adjuster assembly to expand the brake shoes. Adjust the brake shoes out until the pressure of the linings against the drum makes the wheel very difficult to turn. (With drop spindle axles, a modified adjusting tool with about an 80 degree angle should be used.)
4. Rotate the starwheel in the opposite direction until the wheel turns freely with a slight lining drag.
5. Replace the adjusting hole cover and lower the wheel to the ground. Repeat the above procedure on all brakes.

* A "green brake" is an unground, unburnished brake. Normal manufacturing tolerances dictate that there is a break-in period required after which the lining will seat into a perfect concentric situation. During this break-in period, the user must be aware that additional brake adjustments will be mandatory to achieve optimum braking performance.

! WARNINGS !

! Be sure trailer is connected to tow vehicle when loading and unloading machinery.

! Lock tow vehicle brakes **BEFORE** loading and unloading.

! Use wheel chocks when loading or unloading trailer.

! Check tire inflation daily. See tire chart.

! Check wheel nuts weekly - maintain proper torque.

! Check master cylinder fluid level weekly. (Hyd. brakes)

! Trailer should be level when fully loaded. If trailer is low in front when loaded, adjust coupler to make level (or slightly higher in front).

! Use caution when trailer is being loaded or unloaded. **DO NOT** place hands or feet under ramps when raising or lowering.

Portions of this manual were used with the expressed authority of Dexter Axle, but Dexter Axle is not responsible for the accuracy of the information contained herein.

Big Tow Quality, Big Tow Dependability

Employee Owned!
American Pride!
American Made!

Big Tow trailers, U.S. Hwy 12, Litchfield, MN 55355
866-397-8481 Parts Dept. Fax: 320-693-5703
www.bigtowtrailers.com

Big Tow Trailers has a complete line of trailers; small pans and tilts, drop deck trailers, deck over models, large tilts and detachable gooseneck trailers. See your Big Tow Trailers dealer or visit the website for more information.

Manufacturer reserves the right to modify, without notice, specific designs and specifications as deemed advisable on the trailers described herein without obligation in regards to trailers previously sold. The manufacturer also reserves the right to discontinue any model or models without obligation in regards to trailers previously sold. Written warranty covers each trailer. No other warranty expressed or implied is made. Warranty on tires and brakes through original manufacturer. All dimensions approximate.

47-2501:03/2006